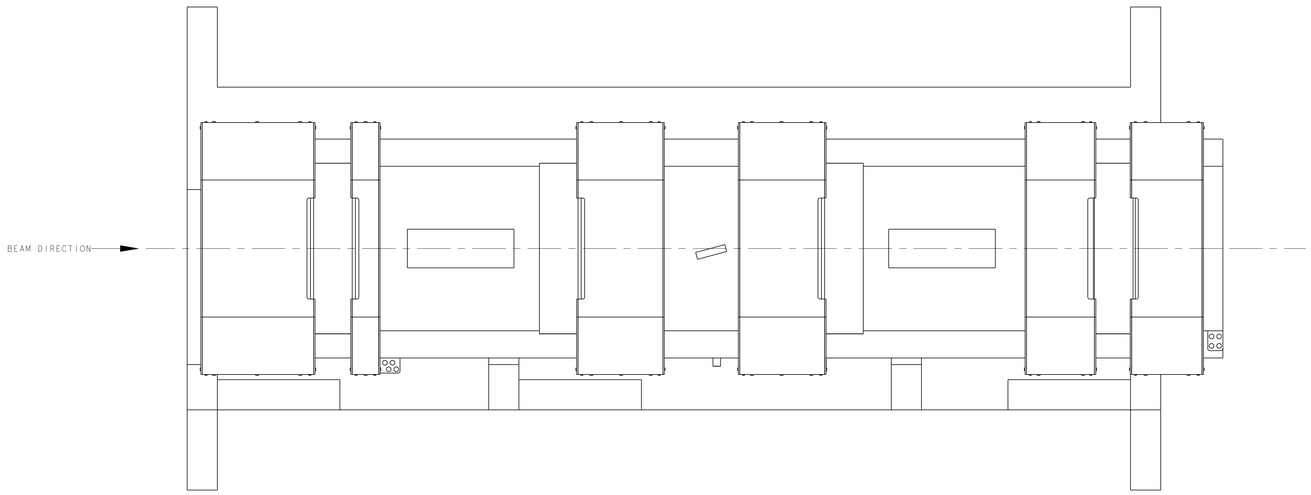

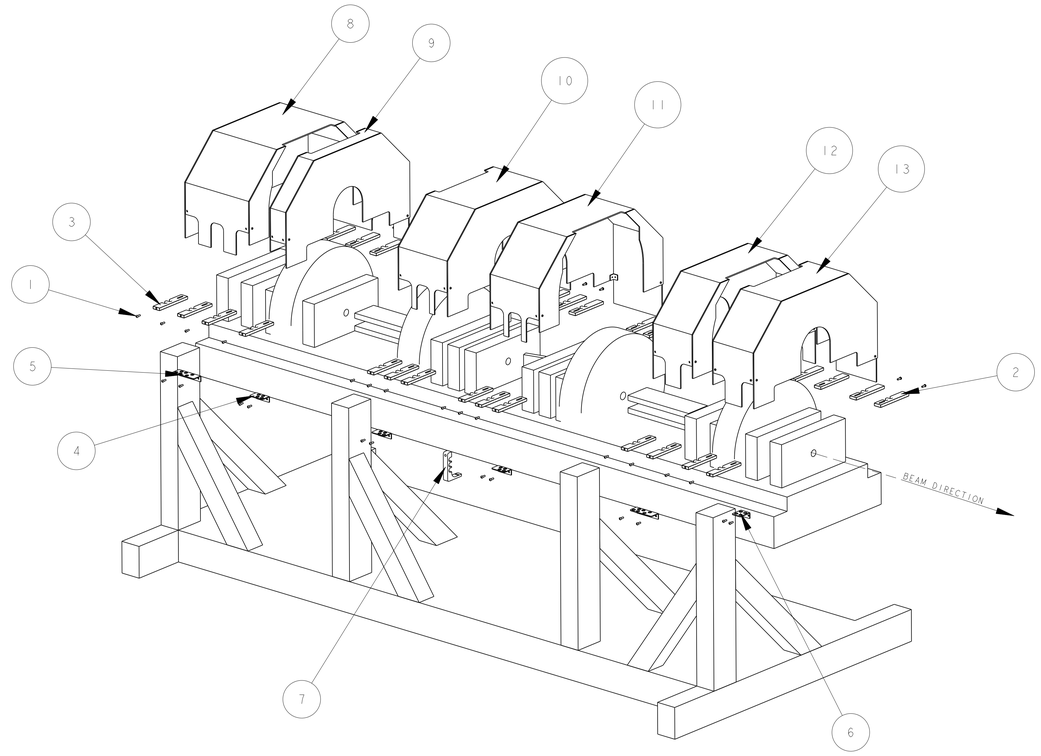

SCALE 3/32

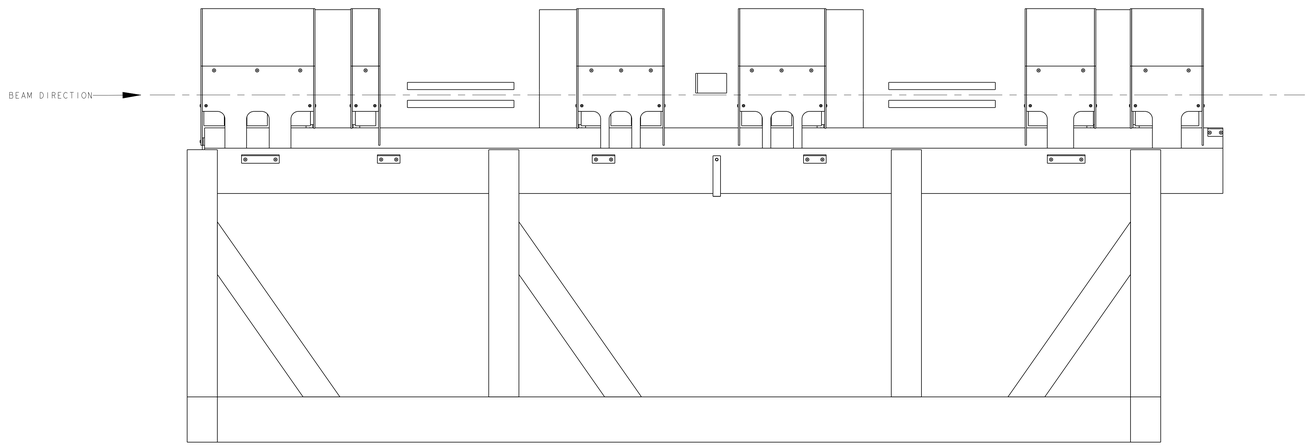

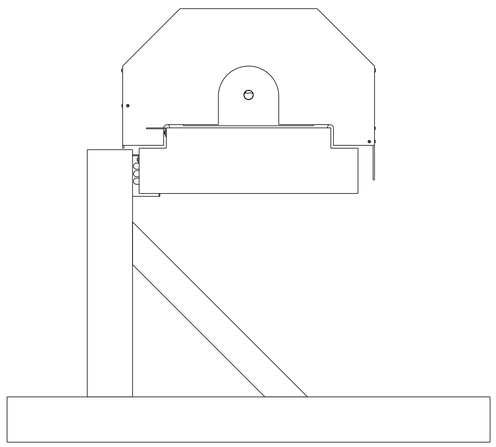

ITEM	PART NO	REQD	DESCRIPTION	MATERIAL
13	25B895	1	QUADRUPOLE MAGNETS 13-14 ELECTRICAL COVER ASSEMBLY	F2100 LEXAN
12	25B894	1	QUADRUPOLE MAGNETS 11-12 ELECTRICAL COVER ASSEMBLY	F2100 LEXAN
11	25B893	1	QUADRUPOLE MAGNETS 8-10 ELECTRICAL COVER ASSEMBLY	F2100 LEXAN
10	25B892	1	QUADRUPOLE MAGNETS 5-7 ELECTRICAL COVER ASSEMBLY	F2100 LEXAN
9	25B891	1	QUADRUPOLE MAGNET 4 ELECTRICAL COVER ASSEMBLY	F2100 LEXAN
8	25B890	1	QUADRUPOLE MAGNETS 1-3 ELECTRICAL COVER ASSEMBLY	F2100 LEXAN
7	25B862	1	RETAINER, MAGNET JUMPER CABLES	BLACK DELRIN
6	25B786	1	LONG 4 HOLE SMA TO N CONNECTOR BRACKET	STAINLESS STEEL
5	25B785	2	6 HOLE SMA TO N CONNECTOR BRACKET	STAINLESS STEEL
4	25B784	3	4 HOLE SMA TO N CONNECTOR BRACKET	STAINLESS STEEL
3	25B775	14	QUAD POWER CABLE BRACKET, LEFT	BLACK DELRIN
2	25B774	14	QUAD POWER CABLE BRACKET, RIGHT	BLACK DELRIN
1		28	1/4-20 x .75 BUTTON HEAD CAP SCREW	SS 18-8

REV	DWG	CHK	ZONE	DATE	CHANGES
A	AD			5/02	INITIAL RELEASE

UNLESS OTHERWISE SPECIFIED
PROJECTION:

TOLERANCES		
	X.X ± 0.1	FRAC. ± 1/64
	X.XX ± 0.03	Angles ± 1.0°
	X.XXX ± 0.010	FINISH 125/

DO NOT SCALE PRINT
THREADS ARE CLASS 2
CHAMFER ENDS OF ALL SCREW THREADS 30°
CUT ROUND, 1.5 THREAD RELIEF ON MACHINED THREADS
BREAK EDGES .016 MAX. ON MACHINED WORK
REMOVE BURRS, WELD SPLATTER & LOOSE SCALE
IN ACCORDANCE WITH ASME Y14.5M & B46.1

SHOP ORDERS
ACCT NO. | NO. REQD | SER NO. | DATE ISSD | DATE REQD
DEL TO
SURFACE TREATMT
IDENT METHOD TAG
PROJECT NUMBER N/A
PROJECT NAME N/A
DWG BY Allan DeMello | DATE 03-May-02
CHK BY D. OSHATZ | DATE
APR BY D. OSHATZ | DATE

ERNEST ORLANDO LAWRENCE
BERKELEY NATIONAL LABORATORY
UNIVERSITY OF CALIFORNIA - BERKELEY

SNS - FES MEBT
ELECTRICAL SYSTEMS
BEAMLINE ELECTRICAL

MICROFILMED:
DWG. TYPE: ASSEM
SHOWN ON: 25B603
SCALE: 1/8
DO NOT SCALE PRINTS
SHEET 1 OF 1
PATENT CLEAR:
DESIGN ACCT. NO.: -
CATEGORY CODE: FE3330
DWG. NO.: 25B6996
SIZE: A
REV.: A

DWG. NO. 25B6996 SIZE A REV. 1 SH. 1