NOTE:
1. ASSEMBLE IN CLEAN ENVIRONMENT. AFTER ASSEMBLY, WRAP TO MAINTAIN CLEANLINESS.
2. FINISHED PART TO BE VACUUM TIGHT. LEAK RATE NOT TO EXCEED 1X10E-8 torr l/sec.He.
3. DIMENSIONS IN INCHES.
4. SILVER PLATE ALL SCREWS.

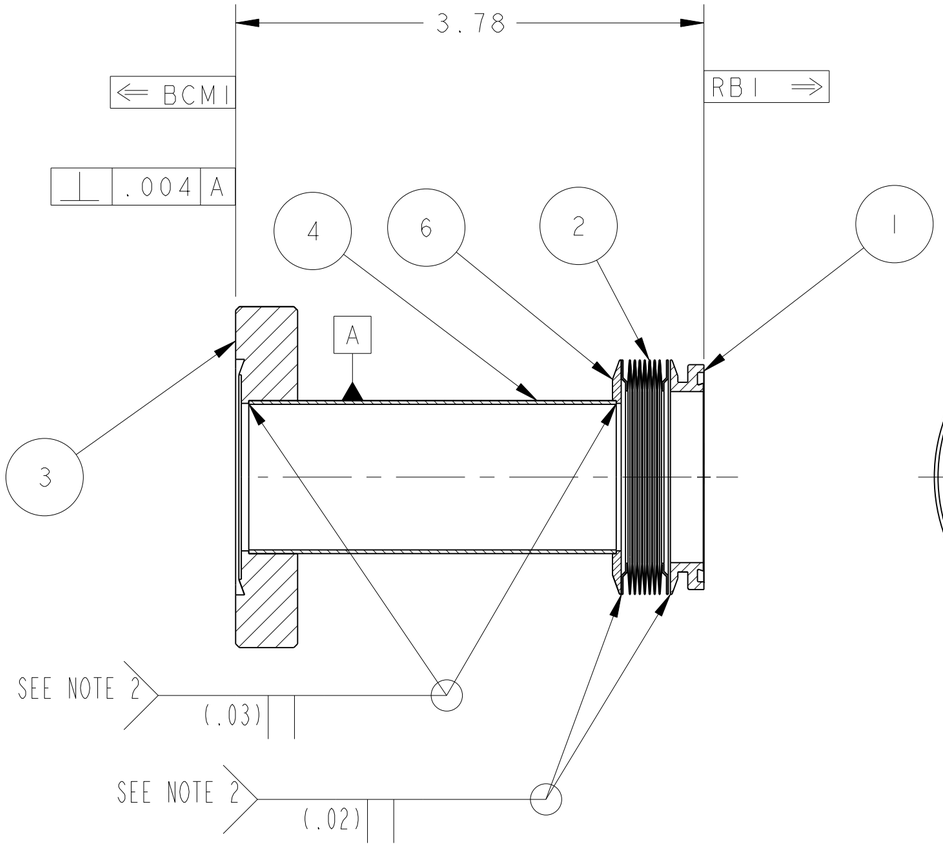

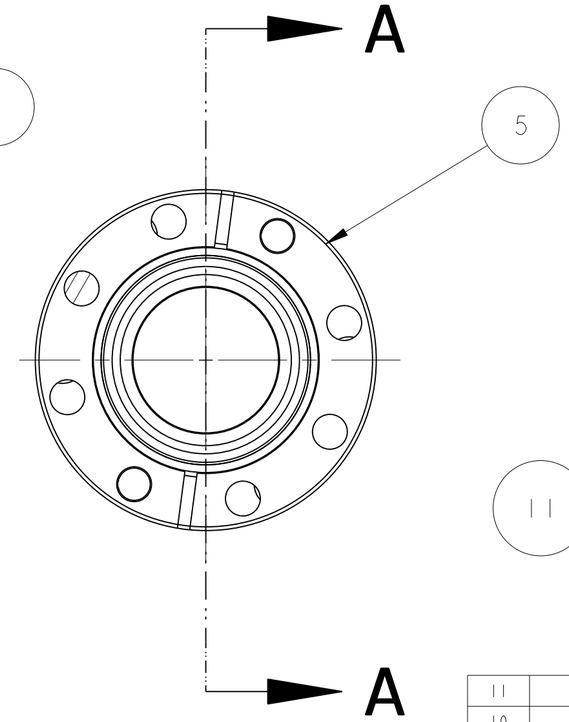

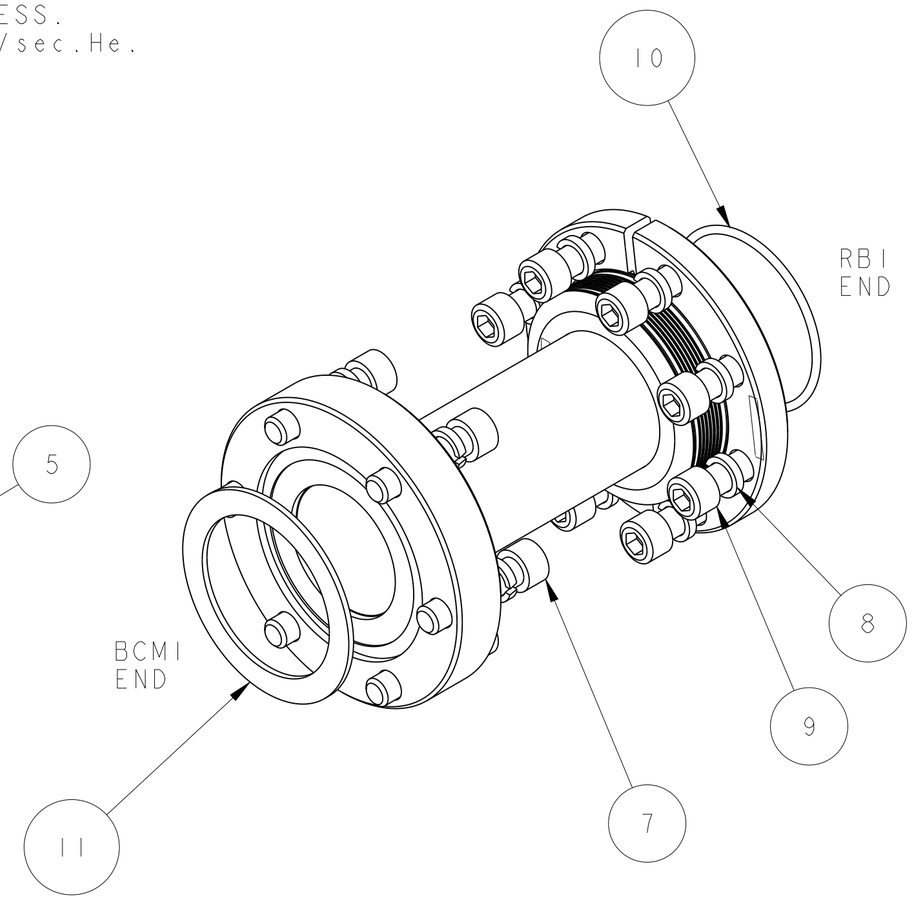

BEAM DIRECTION

SECTION **A-A**
SPLIT FLANGE NOT SHOWN FOR CLARITY

ITEM	PART NO	REQD	DESCRIPTION	MATERIAL
11	-	1	GASKET, CF, 2.75, MDC 191147	CU
10	-	1	O-RING, 2-029	VITON
9		8	SCR, SCH, .25-28 UNF X .75 LG	SS 18-8
8	-	14	LOCK WASHER, SPRING, HIGH COLLAR, .25"	SS 18-8
7		6	SCR, SCH, .25-28 UNF X 1.00 LG	SS 18-8
6	25B491	1	END PIECE, 30MM	SS 304L
5	25B177	1	30 MM BP/ BPM SPLIT FLANGE	SS 304L
4	25B4774-02	1	CUT LIST, BEAM TUBES	SS 304
3	25B694	1	CONFLAT, MODIFIED, BP 1 & BP2, MDC 110012	SS 304
2	25B170	1	30 MM BPM BELLOWS	347 STAINLESS STEEL
1	25B175	1	30 MM BPM/BP BELLOWS SEAL FLANGE	316 STAINLESS STEEL

REV	DWG	CHK	ZONE	DATE	CHANGES
A				08-24-01	INITIAL RELEASE

UNLESS OTHERWISE SPECIFIED
PROJECTION:

TOLERANCES		
	X.X ± 0.1	FRAC. ± 1/64
	X.XX ± 0.02	Angles ± 1.0°
	X.XXX ± 0.005	FINISH 125

DO NOT SCALE PRINT
THREADS ARE CLASS 2
CHAMFER ENDS OF ALL SCREW TREADS 30°
CUT ROUND, 1.5 THREAD RELIEF ON MACHINED THREADS
BREAK EDGES .016 MAX. ON MACHINED WORK
REMOVE BURRS, WELD SPLATTER & LOOSE SCALE
IN ACCORDANCE WITH ASME Y14.5M & B46.1

SHOP ORDERS

ACCT NO.	NO. REQD	SER NO.	-
DEL TO		DATE ISSD	-
		DATE REQD	-
SURFACE TREATMT	-		
IDENT METHOD	TAG		
PROJECT NUMBER	na		
PROJECT NAME	N/A		
DWG BY	R LA MANTIA	DATE	08-24-01
CHK BY	PAL	DATE	08-24-01
APR BY	DPO	DATE	08-24-01

ERNEST ORLANDO LAWRENCE BERKELEY NATIONAL LABORATORY
UNIVERSITY OF CALIFORNIA - BERKELEY

SNS-FES MEBT
BEAM PIPES
DETAIL ASSEMBLY, BEAM PIPE 2

MICROFILMED:	DWG. TYPE	SHOWN ON	SCALE: 1/1	DO NOT SCALE PRINTS
	ASSEM	25B610	SHEET 1 OF 1	
PATENT CLEAR:	DESIGN ACCT. NO.	CATEGORY CODE	DWG. NO. 25B6923 SIZE	REV. A
	-	FE3312		

DWG. NO. 25B6923 SIZE A REV. SH. 1

Dwg. File: 25B692 Model File: 25B692