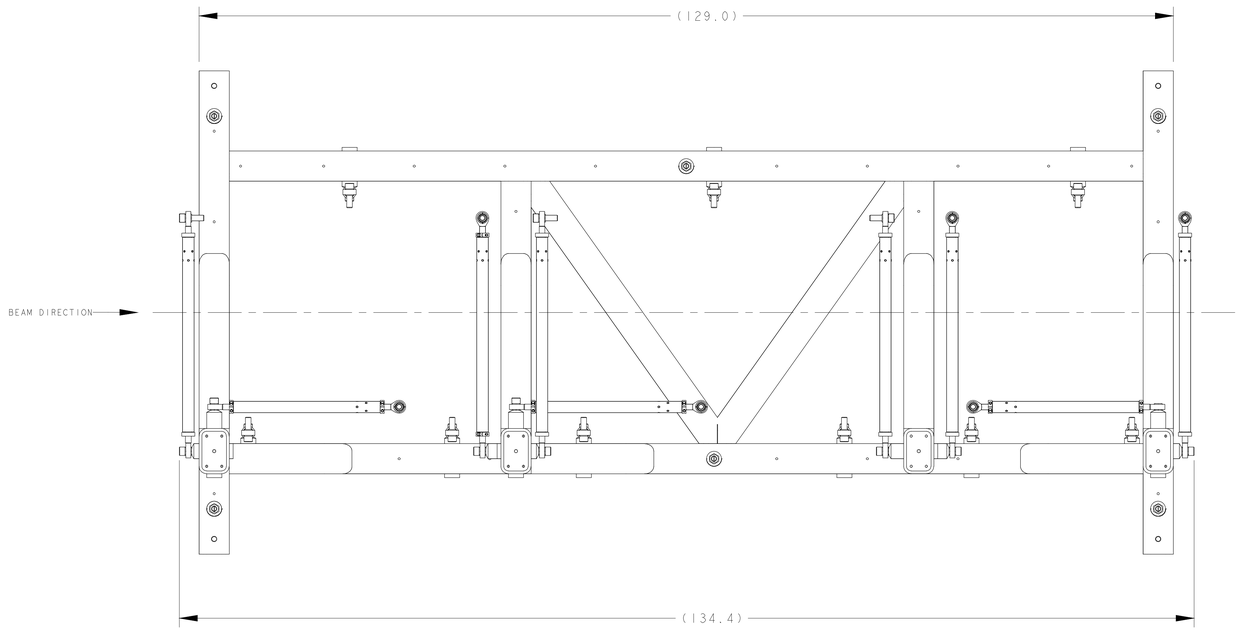

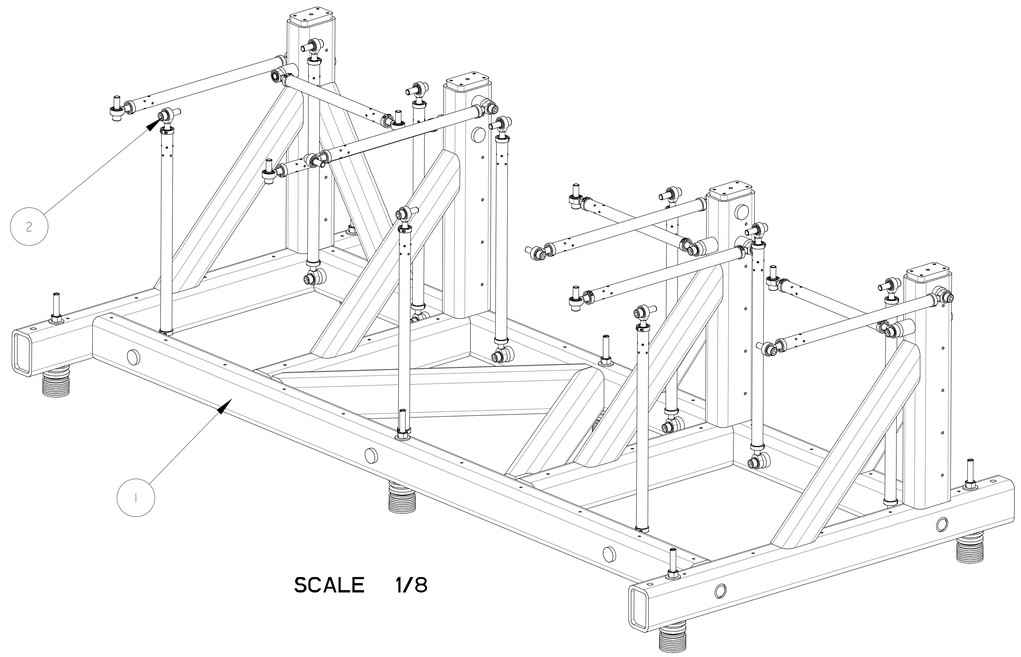

SCALE 1/8

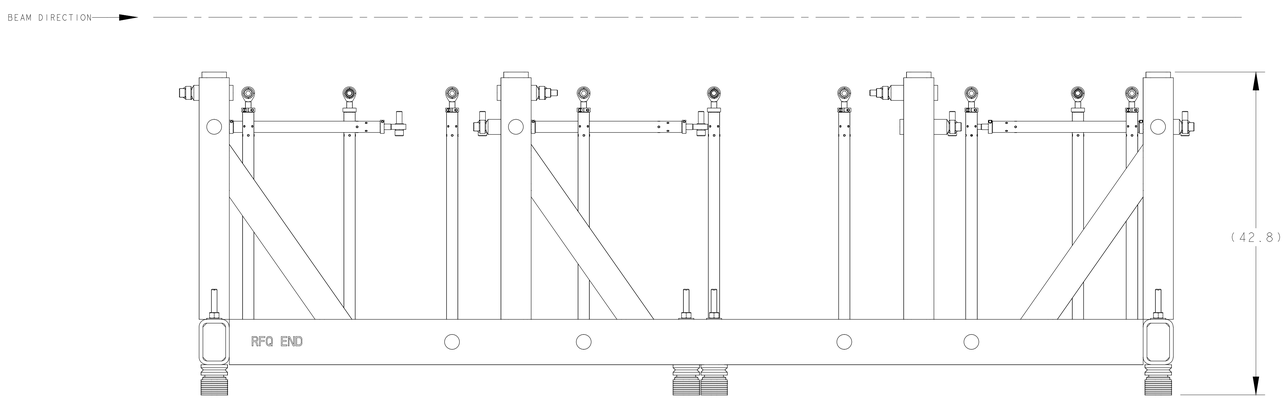

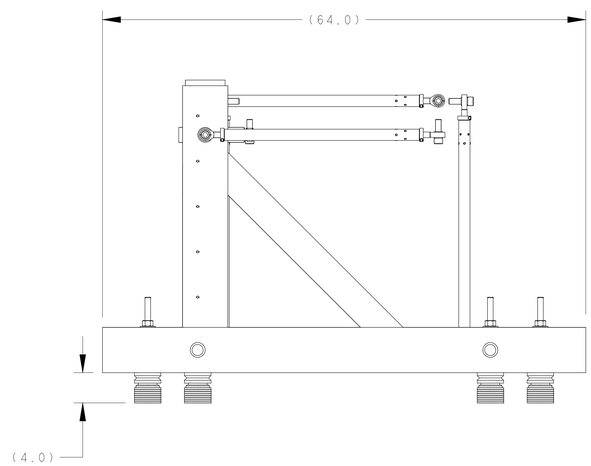

ITEM	PART NO	REQD	DESCRIPTION	MATERIAL
2		18	SCREW, MACH, SOCKET HD 3/4 X 2 1/2 lg.	-
1	25B189	1	MEBT SUPPORT BASE SUBASSEMBLY	-

REV	DWG	CHK	ZONE	DATE	CHANGES
A	AD			5/02	INITIAL RELEASE

UNLESS OTHERWISE SPECIFIED
PROJECTION:
TOLERANCES: X.X ± 0.1 | FRAC. ± 1/64 | X.XX ± 0.03 | Angles ± 1.0° | X.XXX ± 0.010 | FINISH 125/
DO NOT SCALE PRINT
THREADS ARE CLASS 2
CHAMFER ENDS OF ALL SCREW THEADS 30°
CUT ROUND, 1.5 THREAD RELIEF ON MACHINED THREADS
BREAK EDGES .016 MAX. ON MACHINED WORK
REMOVE BURRS, WELD SPLATTER & LOOSE SCALE
IN ACCORDANCE WITH ASME Y14.5M & B46.1

SHOP ORDERS
ACCT NO. | NO. REQD | SER NO. - | DATE ISSD - | DEL TO | DATE REQD -
SURFACE TREATMT -
IDENT METHOD TAG
PROJECT NUMBER na
PROJECT NAME N/A
DWG BY Allan DeMello | DATE 07-May-02
CHK BY D. OSHATZ | DATE
APR BY D. OSHATZ | DATE

ERNEST ORLANDO LAWRENCE BERKELEY NATIONAL LABORATORY
UNIVERSITY OF CALIFORNIA - BERKELEY

SNS - FES MEBT
MECHANICAL SUB-SYSTEM
MEBT FRAME

MICROFILMED:
DWG. TYPE: ASSEM
SHOWN ON: 25B603
SCALE: 1/8
DO NOT SCALE PRINTS
SHEET 1 OF 1
PATENT CLEAR:
DESIGN ACCT. NO.: -
CATEGORY CODE: FE3313
DWG. NO.: 25B6136
SIZE: A
REV.: A

DWG. NO. 25B6136 SIZE A REV. 1 SH. 1