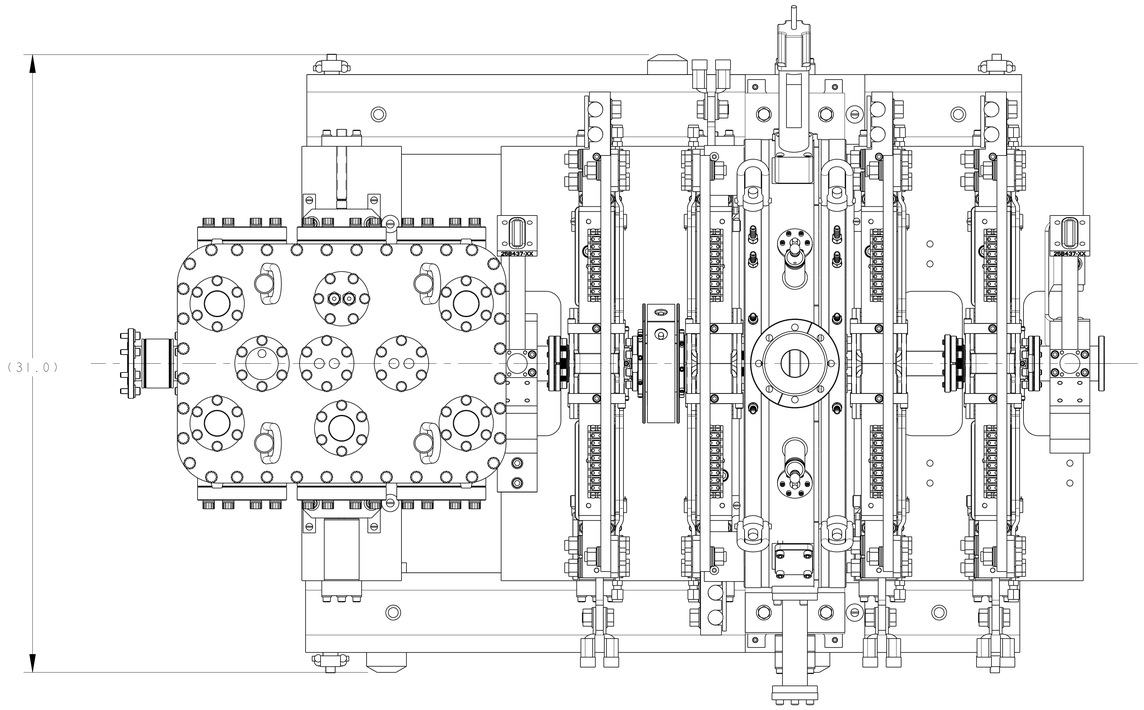

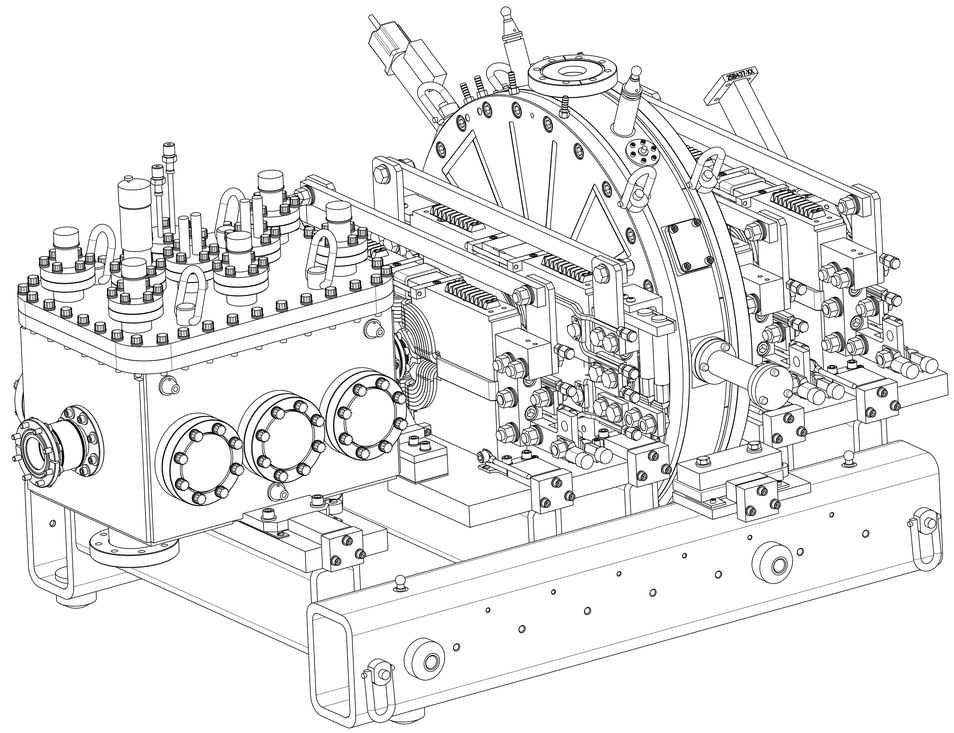

NOTE:
THIS QUADRUPOLE MAGNET (QM12)
IS MOUNTED IN THE REVERSE DIRECTION
RELATIVE TO ALL OTHER QUADRUPOLE MAGNETS.

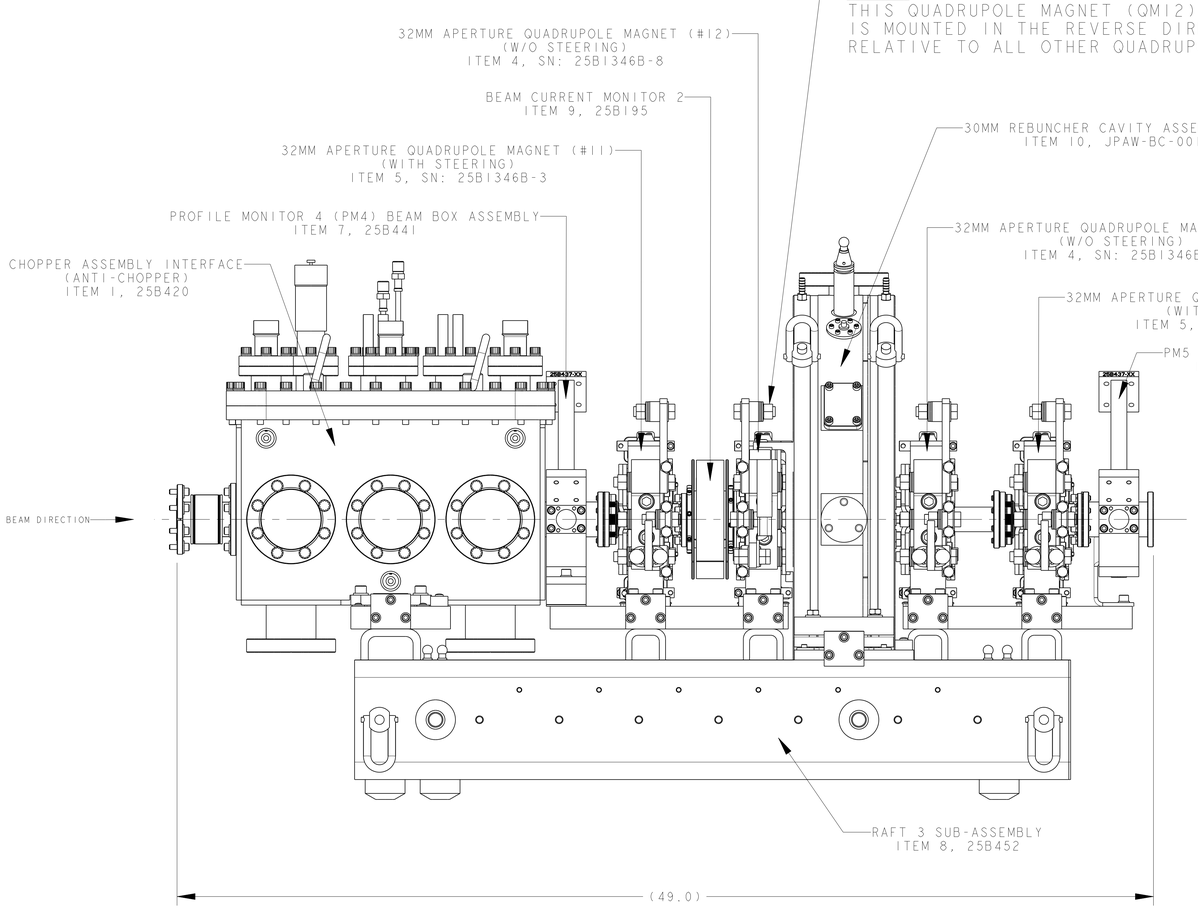

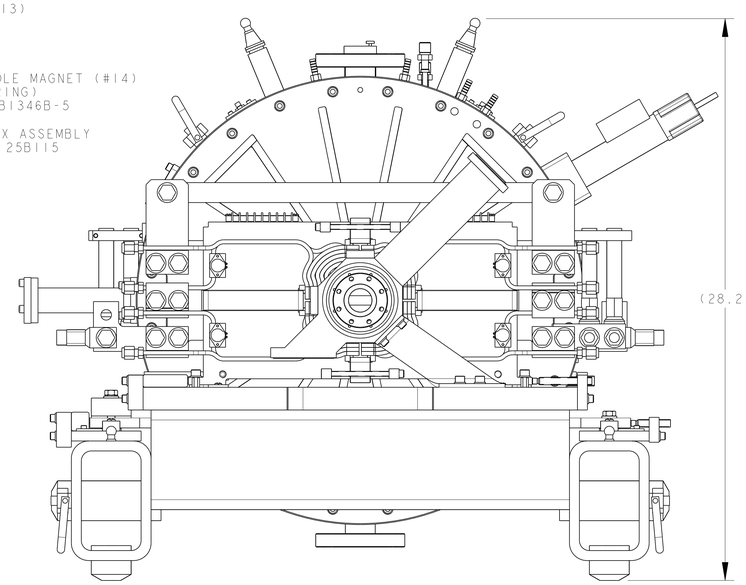

ITEM	PART NO	REQD	DESCRIPTION	MATERIAL
28	25B702	1	T-BAR, REBUNCHER	SST, 304 PRODEC
27	-	4	3/8-16 X 1-1/4 SHC SCREW	SS 18-8
26	-	16	FLAT WASHER, 5/16", MCMASTER-CARR #98017A690 OR EQUIV.	SS 18-8
25	-	8	4-40 x 1/2" SHCS	SS 18-8
24		2	1/4-20 x .75 BUTTON HEAD CAP SCREW	SS 18-8
23		2	1/4-20 x 1.25 BUTTON HEAD CAP SCREW	SS 18-8
22	-	8	FLAT WASHER, 3/8", MCMASTER-CARR #98370A019 OR EQUIV.	SS 18-8
21	25B496	1	DETAIL ASSEMBLY, BEAM PIPE 9	SS 347
20	25B490	1	DETAIL ASSEMBLY, BEAM PIPE 8	SS 347
19	25B712-02	4	BPM SHIM CLAMP, LOWER	SS 304
18	25B712	4	BPM SHIM CLAMP	SS 304
17	-	8	SHIM STOCK	SS
16	25B769-02	1	QUADRUPOLE 12 INSULATOR, RIGHT	G10
15	25B769	1	QUADRUPOLE 12 INSULATOR, LEFT AND RIGHT	G10
14	25B768	1	PROFILE MONITOR SPACER SHIM	ALUMINUM
13	-	16	SOCKET HEAD CAP SCREW, 5/16-18 x 1"	18-8 SS
12	-	2	3/8"-16 UNC HEX. HD. BOLT, 2.5 LG	18-8 SS
11	-	2	3/8"-16 UNC HEX. HD. BOLT, 2.00 LG	18-8 SS
10	JPAW-BC-001	1	REBUNCHER CAVITY ASSEMBLY	-
9	25B195	1	BEAM CURRENT MONITOR 2	-
8	25B452	1	RAFT 3 SUB-ASSEMBLY	-
7	25B441	1	PM4 BEAMBOX ASSEMBLY	-
6	25B115	1	PM5 BEAMBOX ASSEMBLY	-
5	25B158	2	32MM APERTURE QUADRUPOLE W/O STEERING	-
4	25B157	2	32MM APERTURE QUADRUPOLE WITH STEERING	-
3	25B178	2	30 MM BEAM POSITION MONITOR	
2	25B680	1	DETAIL ASSEMBLY, BEAM PIPE 7	
1	25B420	1	CHOPPER ASSEMBLY	

APPROXIMATE WEIGHT = 1888 lb.

REV	DWG	CHK	ZONE	DATE	CHANGES
A	AD			3/02	INITIAL RELEASE

UNLESS OTHERWISE SPECIFIED
PROJECTION:
TOLERANCES: X.X ± 0.1 FRAC. ± 1/64; X.XX ± 0.03 Angles ± 1.0°; X.XXX ± 0.010 FINISH 125
DO NOT SCALE PRINT
THREADS ARE CLASS 2
CHAMFER ENDS OF ALL SCREW THREADS 30°
CUT ROUND, 1.5 THREAD RELIEF ON MACHINED THREADS
BREAK EDGES .016 MAX. ON MACHINED WORK
REMOVE BURRS, WELD SPLATTER & LOOSE SCALE
IN ACCORDANCE WITH ASME Y14.5M & B46.1

SHOP ORDERS
ACCT NO. / NO. REQD / SER NO. / DATE ISSD / DEL TO / DATE REQD
SURFACE TREATMT / IDENT METHOD TAG / PROJECT NUMBER no / PROJECT NAME N/A
DWG BY / DATE 06-Jun-01
CHK BY / DATE
APR BY / DATE

ERNEST ORLANDO LAWRENCE BERKELEY NATIONAL LABORATORY
UNIVERSITY OF CALIFORNIA - BERKELEY

SNS - FES MEBT
MECHANICAL SUB-ASSEMBLY
MEBT RAFT 3 ASSEMBLY

MICROFILMED: | DWG. TYPE ASSEM | SHOWN ON 25B603 | SCALE: 33/100 | DO NOT SCALE PRINTS
SHEET 1 OF 4
PATENT CLEAR: | DESIGN ACCT. NO. - | CATEGORY CODE FE3313 | DWG. NO. 25B6126 | SIZE A | REV. A

SIZE A REV. A DWG. NO. 25B6126 SHT. 1

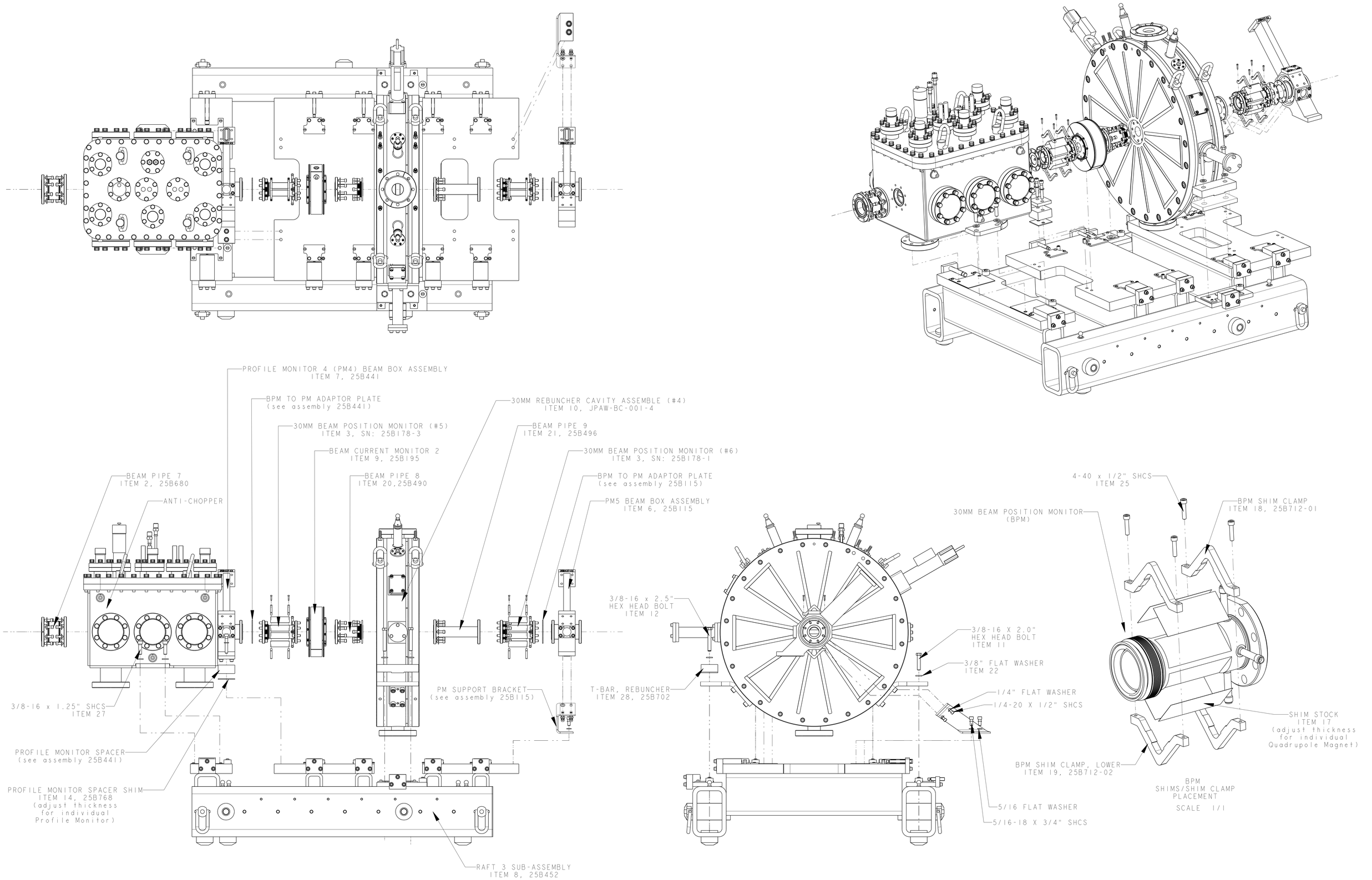

NOTE:

1. THIS DRAWING ILLUSTRATES THE ASSEMBLY OF THE BEAMLINE.
2. ALL QUADRUPOLE MAGNETS ARE REMOVED FOR CLARITY.

REV	DWG	CHK	ZONE	DATE	CHANGES
A	AD			3/02	INITIAL RELEASE

UNLESS OTHERWISE SPECIFIED
PROJECTION:
TOLERANCES: X.X ± 0.1 FRAC. ± 1/64; X.XX ± 0.03 Angles ± 1.0°; X.XXX ± 0.010 FINISH 125
DO NOT SCALE PRINT
THREADS ARE CLASS 2
CHAMFER ENDS OF ALL SCREW THREADS 30°
CUT ROUND, 1.5 THREAD RELIEF ON MACHINED THREADS
BREAK EDGES .016 MAX. ON MACHINED WORK
REMOVE BURRS, WELD SPLATTER & LOOSE SCALE
IN ACCORDANCE WITH ASME Y14.5M & B46.1

SHOP ORDERS
ACCT NO. / NO. REQD / SER NO. - / DATE ISSD - / DATE REQD -
DEL SD
SURFACE TREATMT -
IDENT METHOD TAG
PROJECT NUMBER na
PROJECT NAME N/A
DWG BY - / DATE 25-Sep-01
CHK BY - / DATE
APR BY - / DATE

ERNEST ORLANDO LAWRENCE BERKELEY NATIONAL LABORATORY
UNIVERSITY OF CALIFORNIA - BERKELEY

SNS - FES MEBT
MECHANICAL SUB-ASSEMBLY
MEBT RAFT 3 ASSEMBLY

MICROFILMED: | DWG. TYPE ASSEM | SHOWN ON 25B603 | SCALE: 1/4 | DO NOT SCALE PRINTS
SHEET 2 OF 4
PATENT CLEAR: | DESIGN ACCT. NO. - | CATEGORY CODE FE3313 | DWG. NO. 25B6126 | SIZE A | REV. A

DWG. NO. 25B6126 SIZE A REV. 2

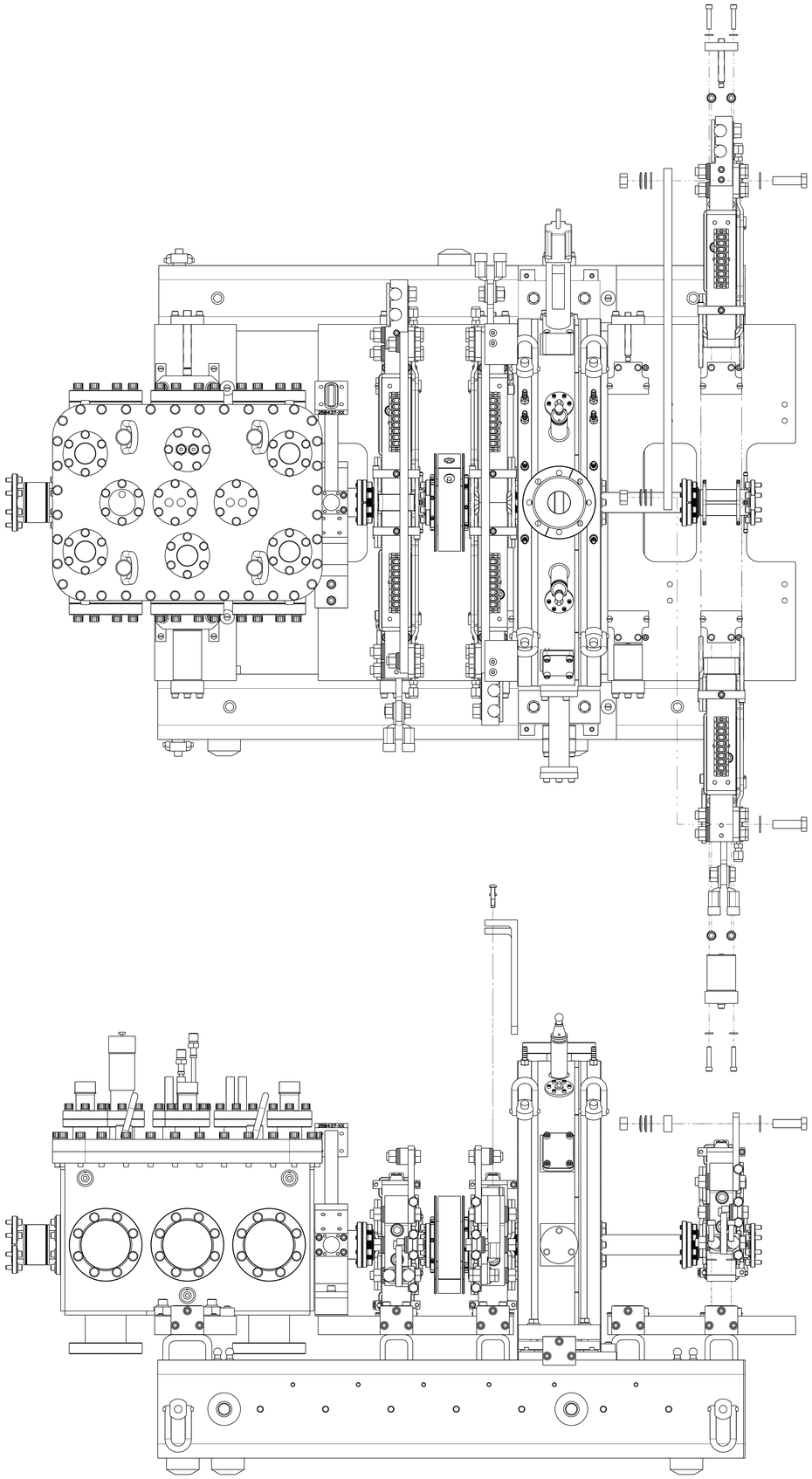

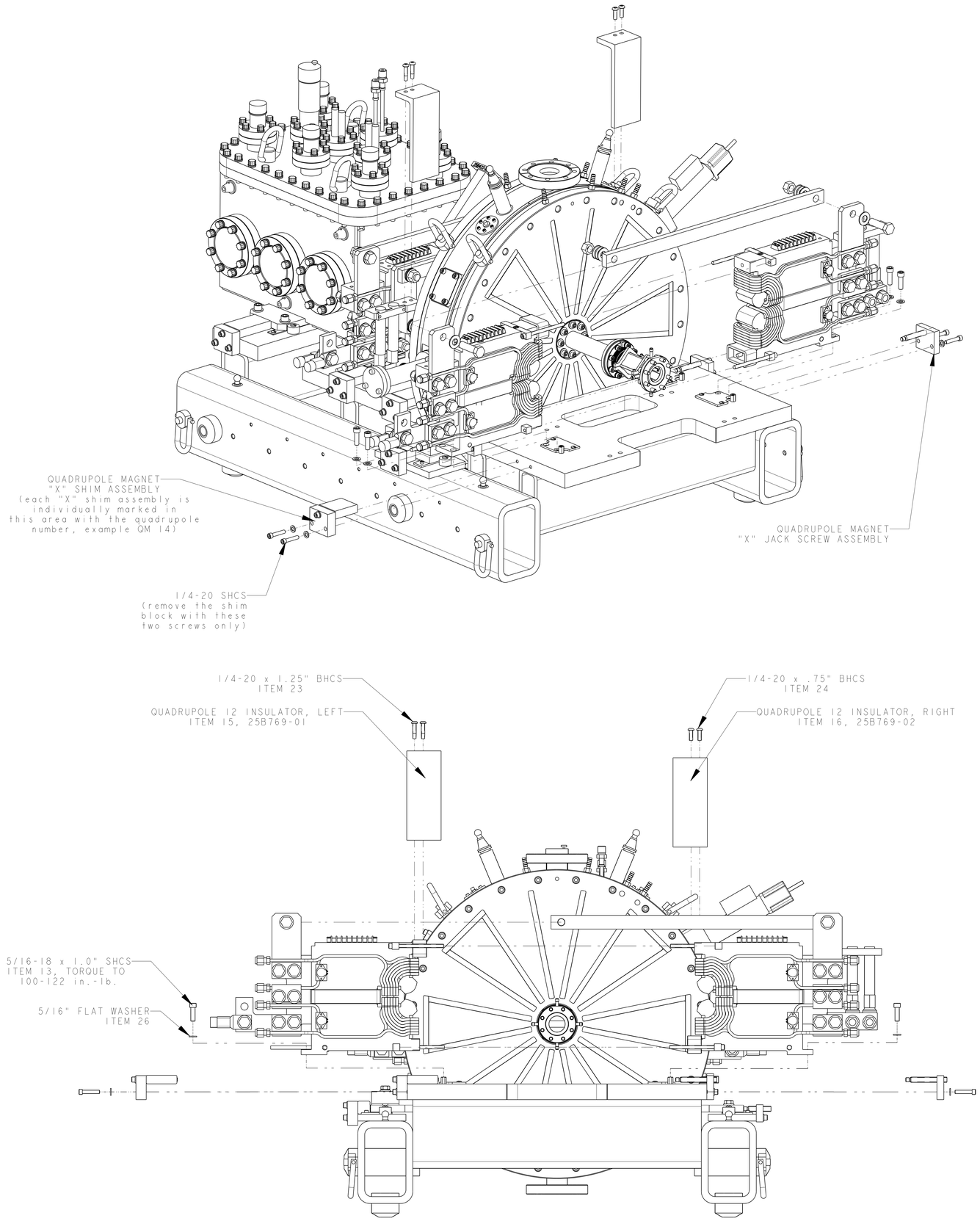

NOTE:

1. THIS DRAWING ILLUSTRATES THE QUADRUPOLE MAGNET SPLIT FOR ASSEMBLY AROUND THE BEAMLINE.
2. ONE QUADRUPOLE MAGNET IS REMOVED FOR CLARITY.

REV	DWG	CHK	ZONE	DATE	CHANGES
A	AD			3/02	INITIAL RELEASE

UNLESS OTHERWISE SPECIFIED
PROJECTION:
TOLERANCES: X.X ± 0.1 | FRAC. ± 1/64 | X.XX ± 0.03 | Angles ± 1.0° | X.XXX ± 0.010 | FINISH 125
DO NOT SCALE PRINT
THREADS ARE CLASS 2
CHAMFER ENDS OF ALL SCREW TREADS 30°
CUT ROUND, 1.5 THREAD RELIEF ON MACHINED THREADS
BREAK EDGES .016 MAX. ON MACHINED WORK
REMOVE BURRS, WELD SPLATTER & LOOSE SCALE
IN ACCORDANCE WITH ASME Y14.5M & B46.1

SHOP ORDERS
ACCT NO. | NO. REQD | SER NO. - | DATE ISSD - | DEL SD | DATE REQD -
SURFACE TREATMT -
IDENT METHOD TAG
PROJECT NUMBER no
PROJECT NAME N/A
DWG BY - | DATE 26-Sep-01
CHK BY - | DATE
APR BY - | DATE

ERNEST ORLANDO LAWRENCE
BERKELEY NATIONAL LABORATORY
UNIVERSITY OF CALIFORNIA - BERKELEY

SNS - FES MEBT
MECHANICAL SUB-ASSEMBLY
MEBT RAFT 3 ASSEMBLY

MICROFILMED: | DWG. TYPE ASSEM | SHOWN ON 25B603 | SCALE: 31/100 | DO NOT SCALE PRINTS
SHEET 3 OF 4
PATENT CLEAR: | DESIGN ACCT. NO. - | CATEGORY CODE FE3313 | DWG. NO. 25B6126 | SIZE A | REV. A

DWG. NO. 25B6126 | SIZE A | REV. A | SH. 3

MEBT RAFT 3
CMM MEASUREMENT RESULTS

(ALL VALUES ARE IN INCHES)

LOCATION	MEASURED x	MEASURED y	MEASURED z	NOMINAL	DEVIATION	DESCRIPTION
QM11_XL	7.6260	—	—	7.6270	-0.0010	PLANE
QM11_YL	—	3.6833	—	3.6830	0.0003	PLANE
QM11_YR	—	3.6831	—	3.6830	0.0001	PLANE
QM11_XR	-7.6271	—	—	-7.6270	-0.0001	PLANE
QM11_ZR_HI	—	—	113.6857	113.6810	0.0047	POINT
QM11_ZR_LO	—	—	113.6851	113.6810	0.0041	POINT
QM11_ZL_HI	—	—	113.6847	113.6810	0.0037	POINT
QM11_ZL_LO	—	—	113.6872	113.6810	0.0062	POINT
QM12_XL	7.6264	—	—	7.6270	-0.0006	PLANE
QM12_YL	—	3.6833	—	3.6830	0.0003	PLANE
QM12_YR	—	3.6829	—	3.6830	-0.0001	PLANE
QM12_XR	-7.6269	—	—	7.6270	0.0001	PLANE
QM12_ZR_HI	—	—	119.5915	119.5860	0.0055	POINT
QM12_ZR_LO	—	—	119.5924	119.5860	0.0064	POINT
QM12_ZL_HI	—	—	119.5978	119.5860	0.0118	POINT
QM12_ZL_LO	—	—	119.5935	119.5860	0.0075	POINT
QM13_XL	7.6268	—	—	7.6270	-0.0002	PLANE
QM13_YL	—	3.6838	—	3.6830	0.0008	PLANE
QM13_YR	—	3.6831	—	3.6830	0.0001	PLANE
QM13_XR	-7.6268	—	—	-7.6270	0.0002	PLANE
QM13_ZR_HI	—	—	129.6220	129.6260	-0.0040	POINT
QM13_ZR_LO	—	—	129.6220	129.6260	-0.0040	POINT
QM13_ZL_HI	—	—	129.6235	129.6260	-0.0025	POINT
QM13_ZL_LO	—	—	129.6237	129.6260	-0.0023	POINT
QM14_XL	7.6264	—	—	7.6270	-0.0006	PLANE
QM14_YL	—	3.6834	—	3.6830	0.0004	PLANE
QM14_YR	—	3.6816	—	3.6830	-0.0014	PLANE
QM14_XR	-7.6271	—	—	-7.6270	-0.0001	PLANE
QM14_ZR_HI	—	—	135.3350	135.3350	0.0000	POINT
QM14_ZR_LO	—	—	135.3311	135.3350	-0.0039	POINT
QM14_ZL_HI	—	—	135.3298	135.3350	-0.0052	POINT
QM14_ZL_LO	—	—	135.3323	135.3350	-0.0027	POINT
AC_BALL_A	6.7215	4.1021	95.5249	—	—	SPHERICITY
AC_BALL_B	6.7192	4.0889	108.0218	—	—	SPHERICITY
AC_BALL_C	6.7143	-3.0474	101.7698	—	—	SPHERICITY
AC_BALL_D	-6.7341	4.0938	95.5260	—	—	SPHERICITY
AC_BALL_E	-6.7350	4.0801	108.0225	—	—	SPHERICITY
AC_BALL_F	-6.7240	-3.0489	101.7658	—	—	SPHERICITY
RAFT_BALL_1	12.5210	-6.5400	103.6190	—	—	SPHERICITY
RAFT_BALL_2	12.4838	-6.5727	132.7172	—	—	SPHERICITY
RAFT_BALL_3	-12.4992	-6.5550	104.3336	—	—	SPHERICITY
RAFT_BALL_4	-12.5460	-6.5613	131.7364	—	—	SPHERICITY
RC_BALL_R (Rebuncher #4)	-5.7608	13.9155	124.5622	—	—	SPHERICITY
RC_BALL_L (Rebuncher #4)	5.7686	13.9049	124.5503	—	—	SPHERICITY
RC_ZL_HI	—	—	121.9538	121.9690	-0.0152	POINT
RC_ZL_LO	—	—	121.9689	121.9690	-0.0001	POINT
RC_ZR_HI	—	—	121.9495	121.9690	-0.0195	POINT
RC_ZR_LO	—	—	121.9609	121.9690	-0.0081	POINT
AC_TOP_1	—	5.7204	—	5.7000	0.0204	POINT
AC_TOP_2	—	5.7151	—	5.7000	0.0151	POINT
AC_TOP_3	—	5.7156	—	5.7000	0.0156	POINT
AC_TOP_4	—	5.7093	—	5.7000	0.0093	POINT

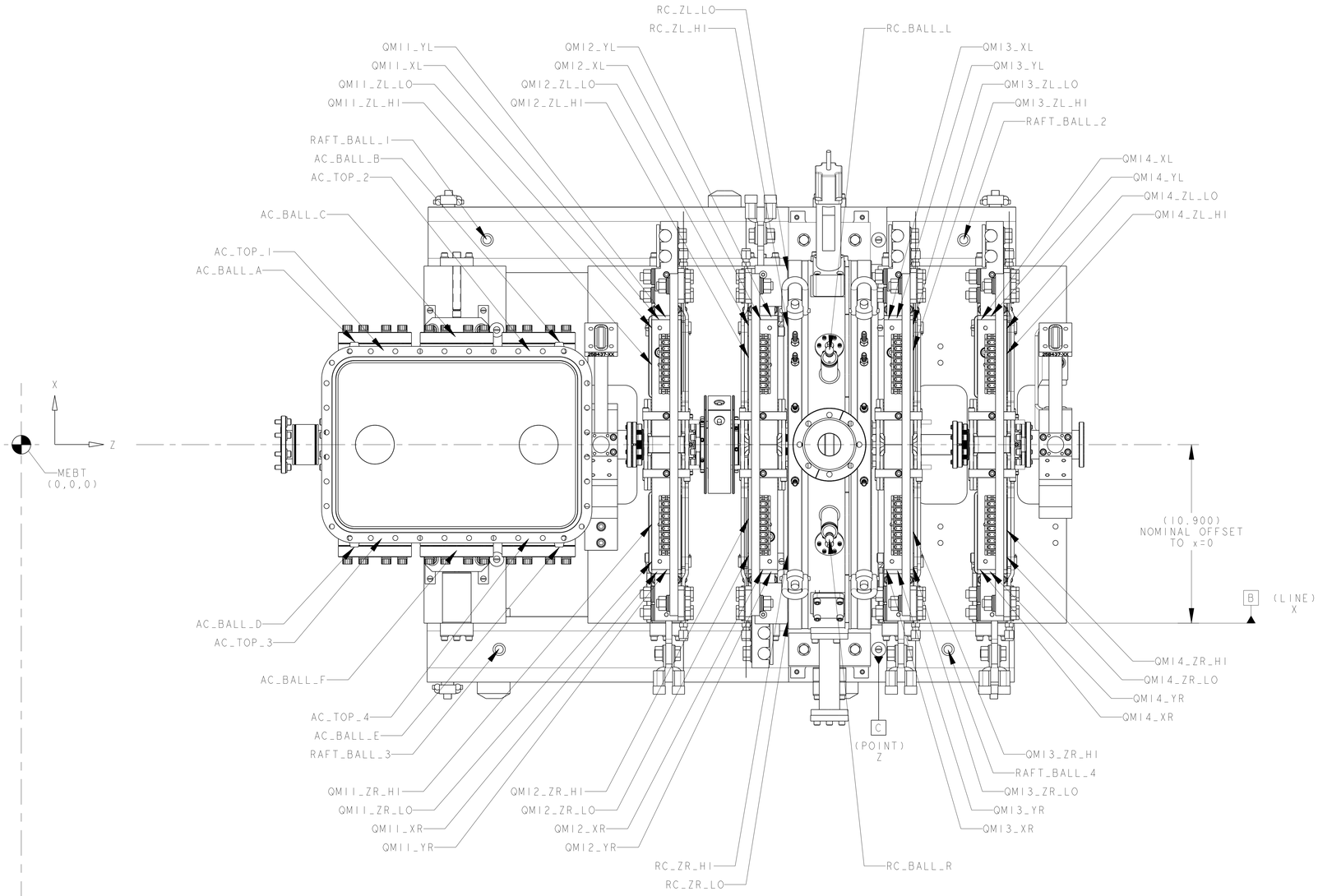

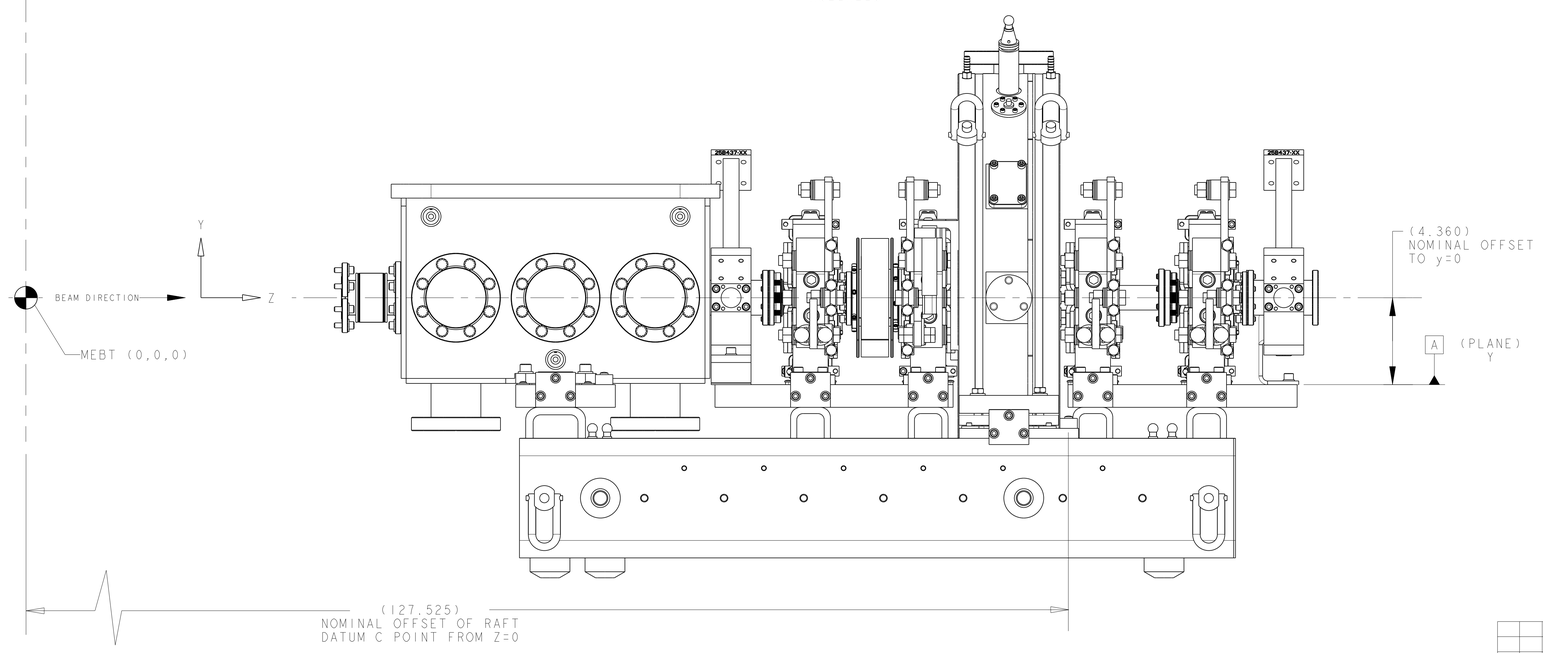

NOTE:

1. THIS DRAWING ILLUSTRATES THE LOCATIONS FROM WHICH FIDUCIAL DATA WAS TAKEN.
2. THE ANTI-CHOPPER COVER IS REMOVED DURING MEASUREMENTS.

REV	DWG	CHK	ZONE	DATE	CHANGES
A	AD			3/02	INITIAL RELEASE

UNLESS OTHERWISE SPECIFIED
PROJECTION:
TOLERANCES: X.X ± 0.1 FRAC. ± 1/64; X.XX ± 0.03 Angles ± 1.0°; X.XXX ± 0.010 FINISH 125
DO NOT SCALE PRINT
THREADS ARE CLASS 2
CHAMFER ENDS OF ALL SCREW THREADS 30°
CUT ROUND, 1.5 THREAD RELIEF ON MACHINED THREADS
BREAK EDGES .016 MAX. ON MACHINED WORK
REMOVE BURRS, WELD SPLATTER & LOOSE SCALE
IN ACCORDANCE WITH ASME Y14.5M & B46.1

SHOP ORDERS
ACCT NO. / REQD NO. / DATE
DEL TO / DATE REQD
SURFACE TREATMT
IDENT METHOD: TAG
PROJECT NUMBER: no
PROJECT NAME: N/A
DWG BY: DATE 11-Oct-01
CHK BY: DATE
APP BY: DATE

ERNEST ORLANDO LAWRENCE BERKELEY NATIONAL LABORATORY
UNIVERSITY OF CALIFORNIA - BERKELEY

SNS - FES MEBT
MECHANICAL SUB-ASSEMBLY
MEBT RAFT 3 ASSEMBLY

MICROFILMED: | DWG. TYPE: ASSEM | SHOWN ON: 25B603 | SCALE: 33/100 | DO NOT SCALE PRINTS
PATENT CLEAR: | DESIGN ACCT. NO.: - | CATEGORY CODE: FE3313 | SHEET 4 OF 4 | DWG. NO.: 25B6126 | SIZE: A | REV:

DWG. NO. 25B6126 SIZE A REV SH 4