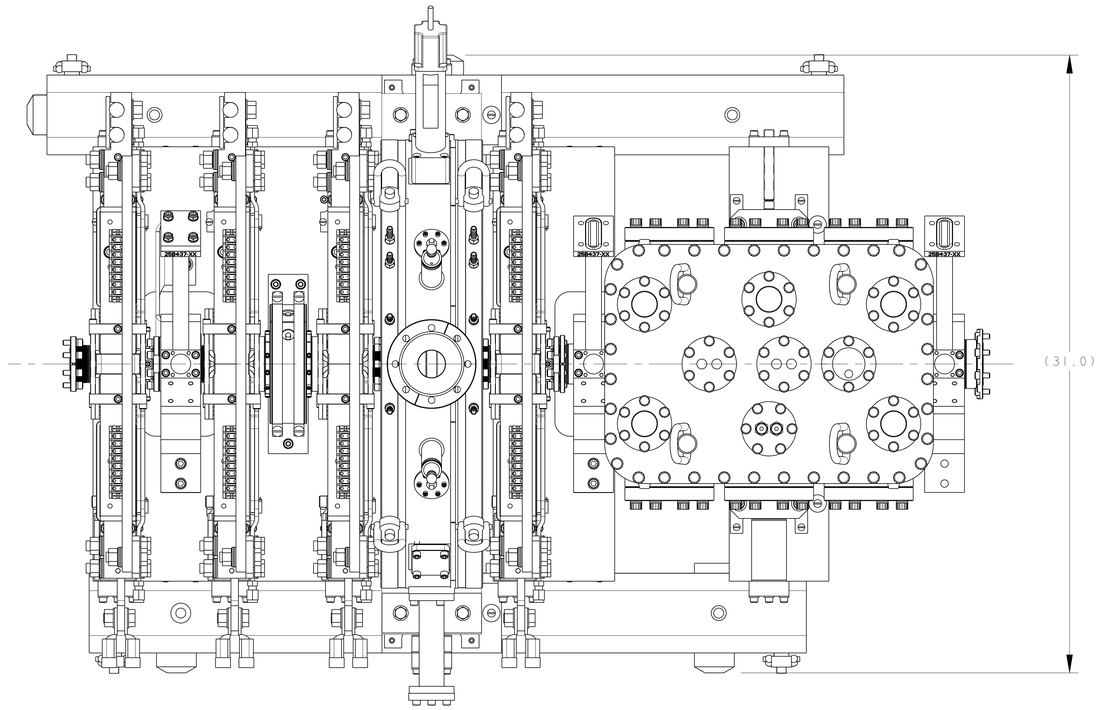

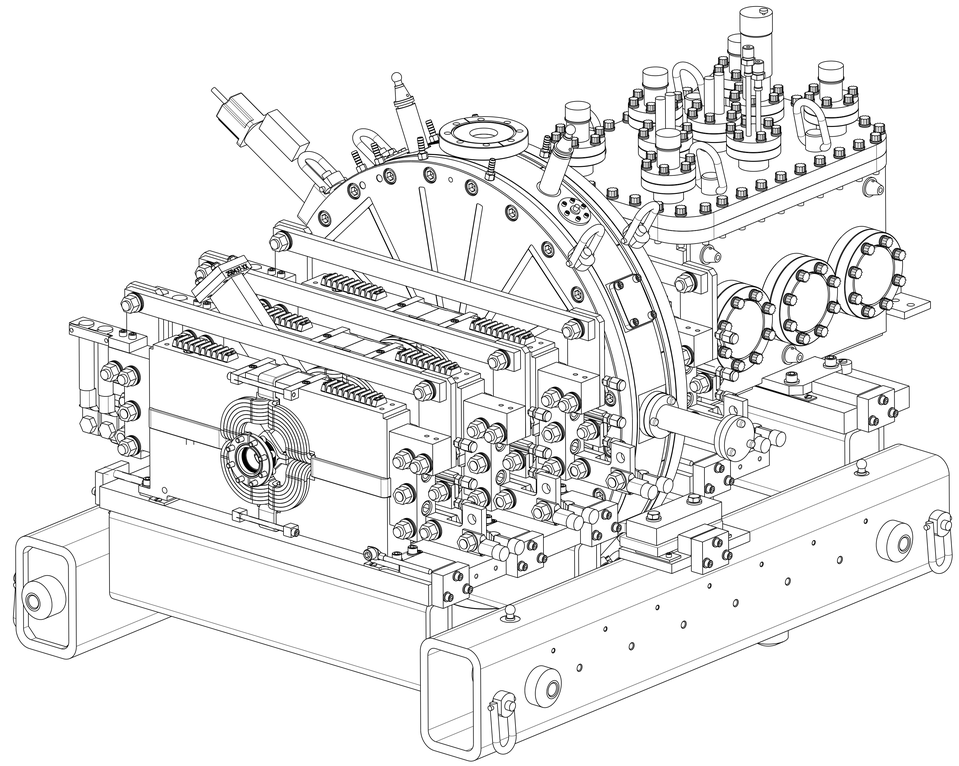

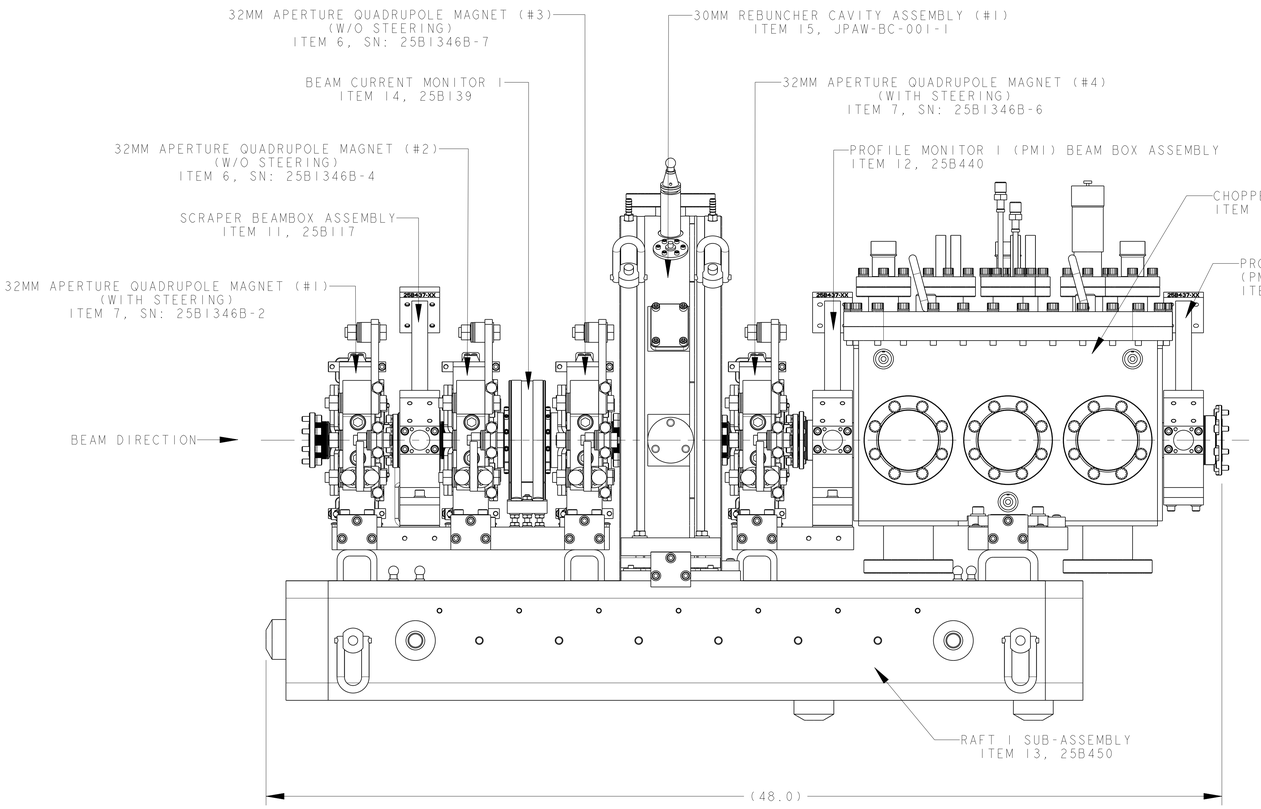

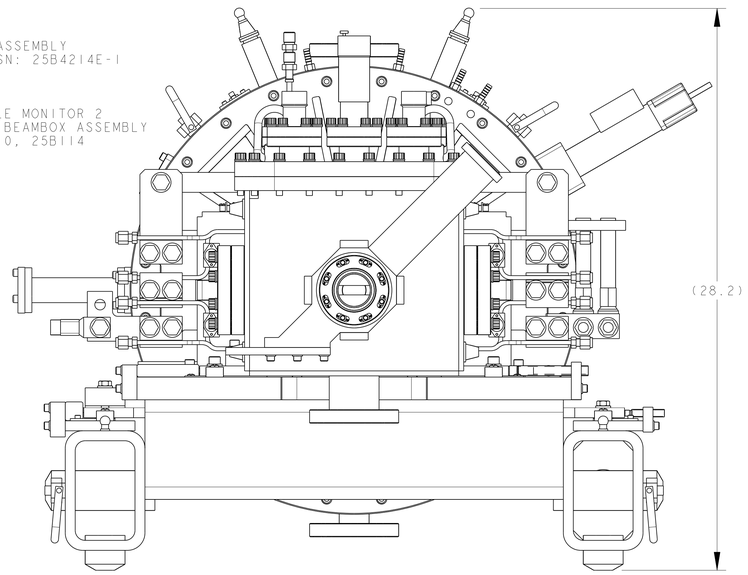

ITEM	PART NO	REQD	DESCRIPTION	MATERIAL
34		9	1/4'' NARROW FLAT WASHER	STAINLESS STEEL
33	25B767	3	BCM 1 SUPPORT STUD	STAINLESS STEEL
32	25B766	2	BCM 1 RETAINER STRAP, 0.010" THICK	STAINLESS STEEL
31	25B702	1	T-BAR, REBUNCHER	SST, 304 PRODEC
30	-	4	3/8-16 X 1-1/4 SHC SCREW	SS 18-8
29	-	16	FLAT WASHER, 5/16", MCMASTER-CARR #98017A690 OR EQUIV.	SS 18-8
28	-	8	4-40 x 1/2" SHCS	SS 18-8
27	-	4	SCR, BDGH, 1/4-20 X 3/8 L	SS 18-8
26	-	8	FLAT WASHER, 3/8", MCMASTER-CARR #98370A019 OR EQUIV.	SS 18-8
25	25B712-02	4	BPM SHIM CLAMP, LOWER	SS 304
24	25B712	4	BPM SHIM CLAMP	SS 304
23	-	8	SHIM STOCK	SS
22	25B768	2	PROFILE MONITOR SPACER SHIM	ALUMINUM
21	25B764	1	BCM 1 SUPPORT BASE	6061 ALUMINUM
20	-	16	SOCKET HEAD CAP SCREW, 5/16-18 x 1"	18-8 SS
19		9	1/4"-20 HEX. NUT	18-8 SS
18	-	2	3/8"-16 UNC HEX. HD. BOLT, 2.5 LG	18-8 SS
17	-	2	3/8"-16 UNC HEX. HD. BOLT, 2.00 LG	18-8 SS
16	25B765	1	BCM 1 RUBBER CUSHION	1/16" RUBBER SHEET
15	JPAW-BC-001	1	REBUNCHER CAVITY ASSEMBLY	-
14	25B139	1	BEAM CURRENT MONITOR 1	-
13	25B450	1	RAFT 1 SUB-ASSEMBLY	-
12	25B440	1	PM1 BEAMBOX ASSEMBLY	-
11	25B117	1	SCRAPER BEAMBOX ASSEMBLY	-
10	25B114	1	PM2 BEAMBOX ASSEMBLY	-
9	25B476	1	DETAIL ASSEMBLY, BP4 SPOOL	-
8	25B449	1	DETAIL ASSEMBLY, BP3 SPOOL	-
7	25B158	2	32MM APERTURE QUADRUPOLE W/O STEERING	-
6	25B157	2	32MM APERTURE QUADRUPOLE WITH STEERING	-
5	25B187	1	30 MM QM1 BEAM POSITION MONITOR	
4	25B178	1	30 MM BEAM POSITION MONITOR	
3	25B696	1	DETAIL ASSEMBLY, BEAM PIPE 1	
2	25B692	1	DETAIL ASSEMBLY, BEAM PIPE 2	
1	25B420	1	CHOPPER ASSEMBLY	

APPROXIMATE WEIGHT = 1,804 lb.

REV	DWG	CHK	ZONE	DATE	CHANGES
A	AD			3/02	INITIAL RELEASE

UNLESS OTHERWISE SPECIFIED
PROJECTION:
TOLERANCE: X.X ± 0.1 FRAC. ± 1/64; X.XX ± 0.03 Angles ± 1.0°; X.XXX ± 0.010 FINISH 125
DO NOT SCALE PRINT
THREADS ARE CLASS 2
CHAMFER ENDS OF ALL SCREW THREADS 30°
CUT ROUND, 1.5 THREAD RELIEF ON MACHINED THREADS
BREAK EDGES .016 MAX. ON MACHINED WORK
REMOVE BURRS, WELD SPLATTER & LOOSE SCALE
IN ACCORDANCE WITH ASME Y14.5M & B46.1

SHOP ORDERS
ACCT NO. / NO. REQD / SER NO. / DATE / ISSD / DATE / REQD / DATE
SURFACE TREATMT / IDENT METHOD: TAG / PROJECT NUMBER: no / PROJECT NAME: N/A
DWG BY: Allan DeMello DATE 06-Jun-01
CHK BY: D. Oshatz DATE
APR BY: D. Oshatz DATE

ERNEST ORLANDO LAWRENCE BERKELEY NATIONAL LABORATORY
UNIVERSITY OF CALIFORNIA - BERKELEY

SNS - FES MEBT
GENERAL
MEBT RAFT 1 ASSEMBLY

MICROFILMED: | DWG. TYPE: ASSEM | SHOWN ON: 25B603 | SCALE: 33/100 | DO NOT SCALE PRINTS
SHEET 1 OF 4
PATENT CLEAR: | DESIGN ACCT. NO.: - | CATEGORY CODE: FE3330 | DWG. NO.: 25B6106 | SIZE: A | REV.:

25B6106 A 1

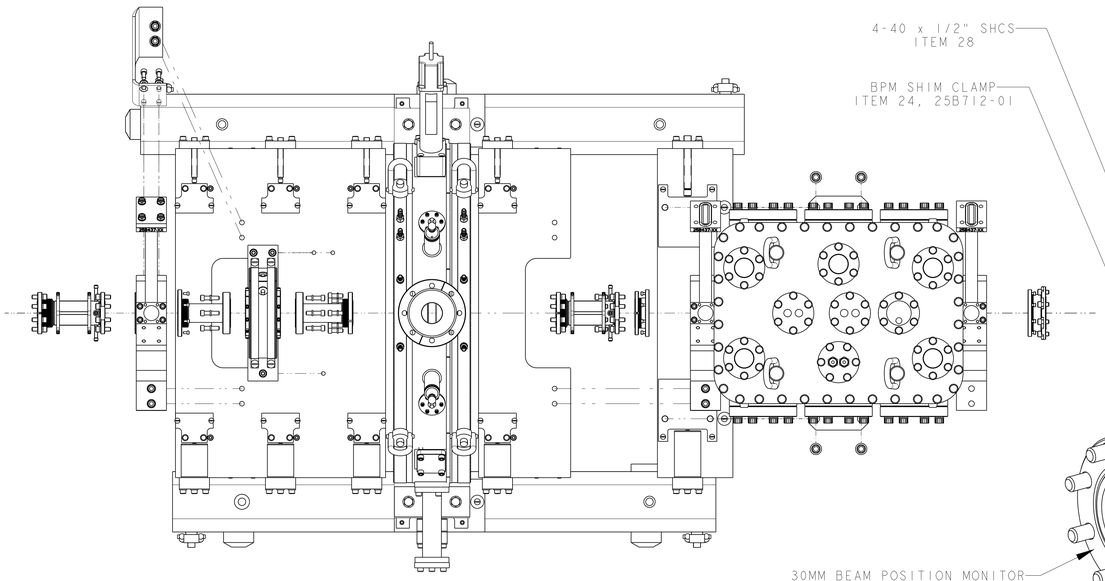

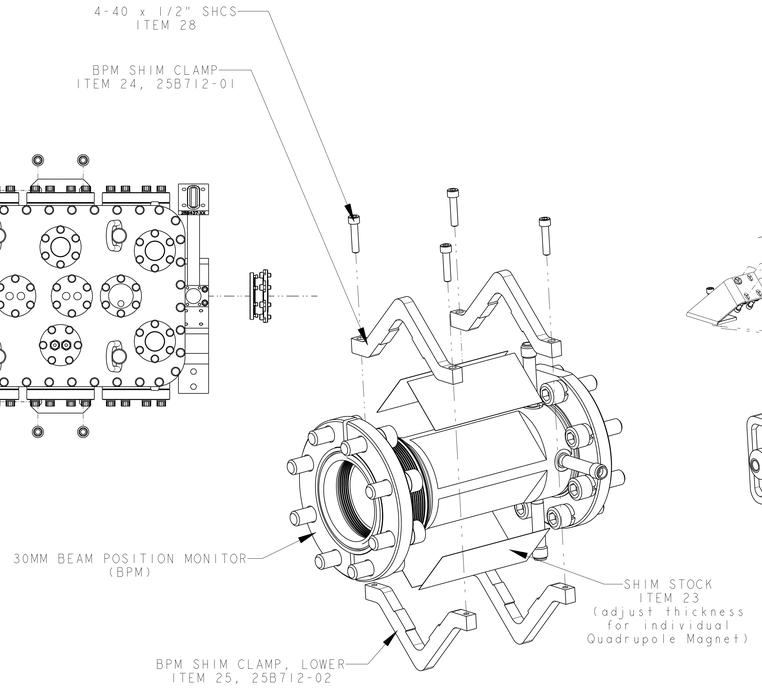

BPM
SHIM/SHIM CLAMP
PLACEMENT

SCALE 1/1

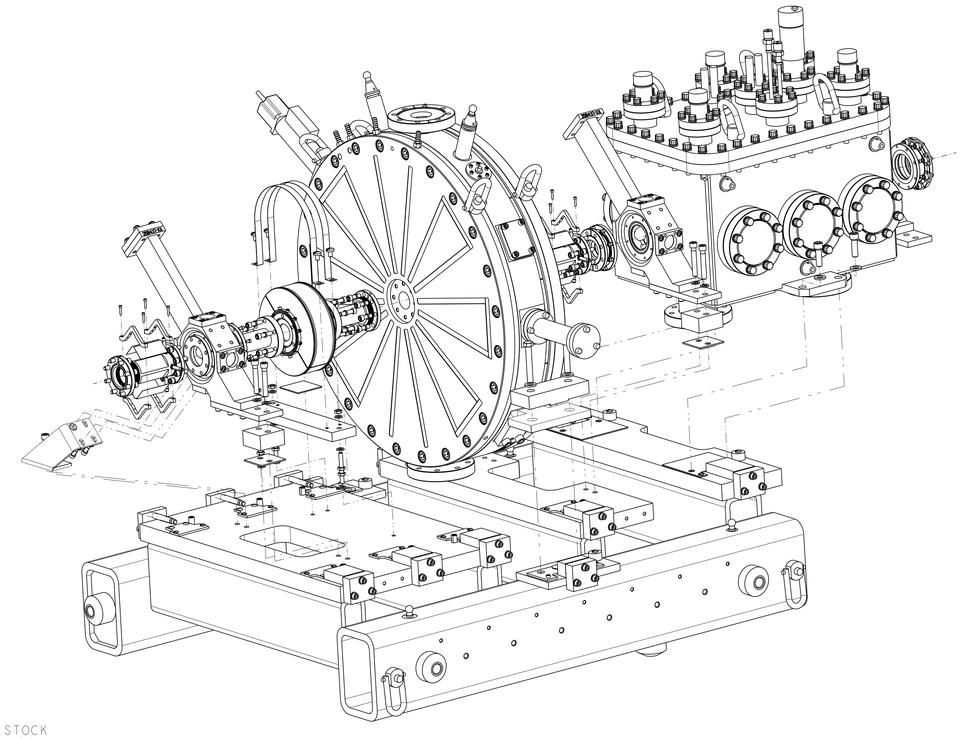

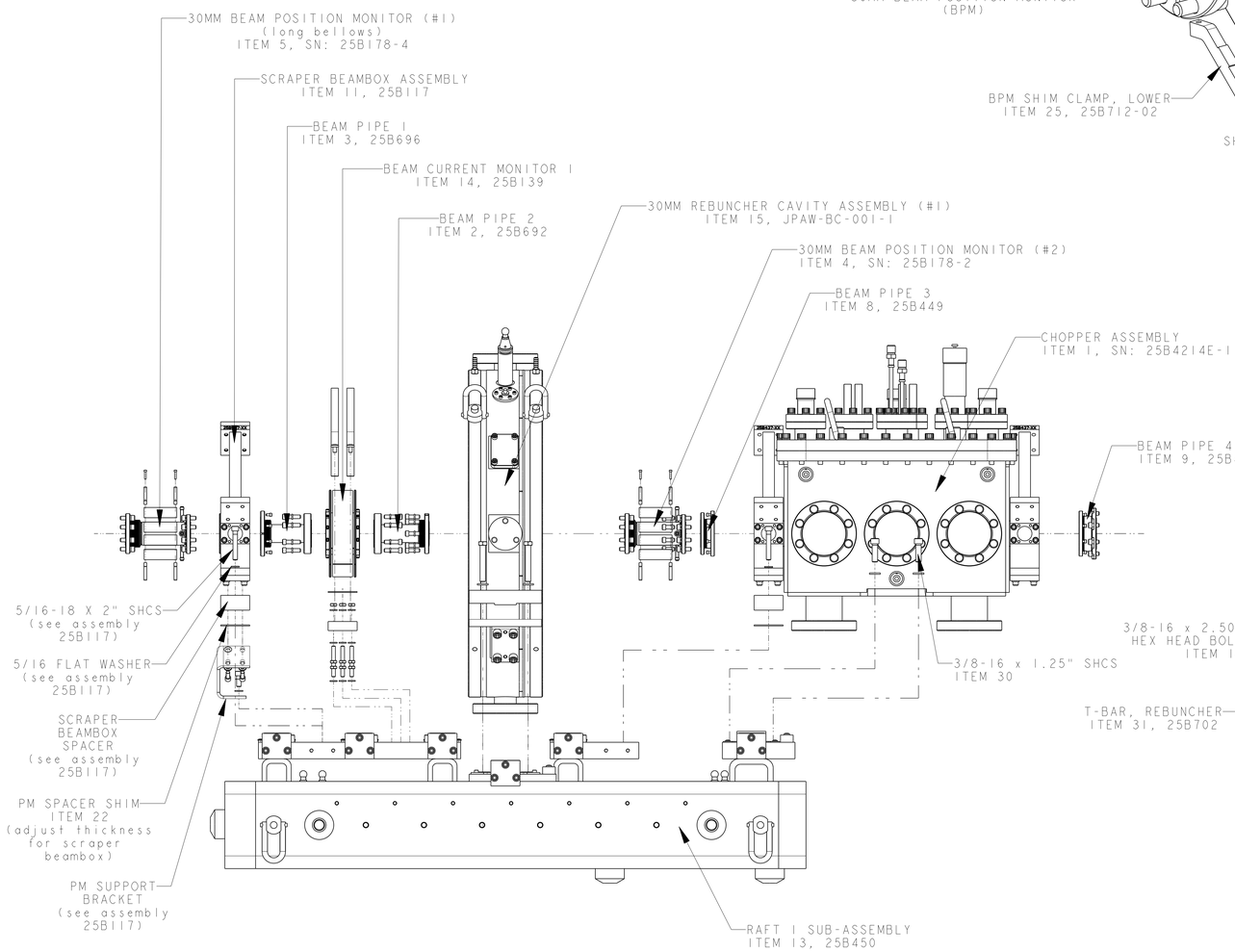

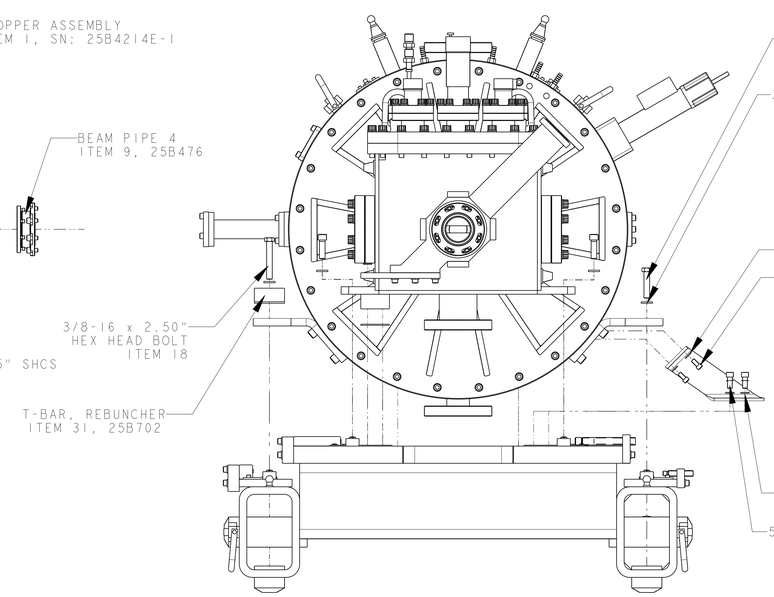

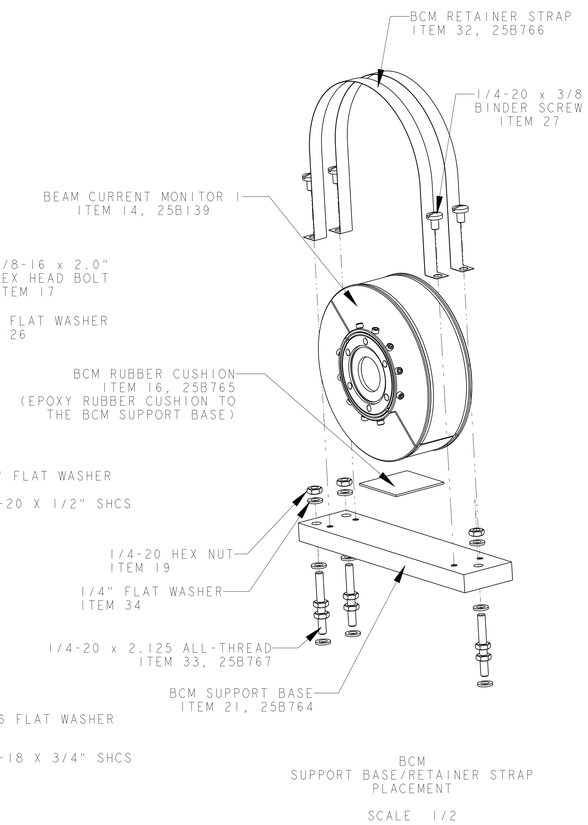

BCM
SUPPORT BASE/RETAINER STRAP
PLACEMENT

SCALE 1/2

NOTE:

1. THIS DRAWING ILLUSTRATES THE ASSEMBLY OF THE BEAMLINE.
2. ALL QUADRUPOLES MAGNETS REMOVED FOR CLARITY.

REV	DWG	CHK	ZONE	DATE	CHANGES
A	AD			3/02	INITIAL RELEASE

UNLESS OTHERWISE SPECIFIED
PROJECTION:
TOLERANCES: X.X ± 0.1 FRAC. ± 1/64; X.XX ± 0.03 Angles ± 1.0°; X.XXX ± 0.010 FINISH 125
DO NOT SCALE PRINT
THREADS ARE CLASS 2
CHAMFER ENDS OF ALL SCREW THREADS 30°
CUT ROUND, 1.5 THREAD RELIEF ON MACHINED THREADS
BREAK EDGES .016 MAX. ON MACHINED WORK
REMOVE BURRS, WELD SPLATTER & LOOSE SCALE
IN ACCORDANCE WITH ASME Y14.5M & B46.1

SHOP ORDERS
ACCT NO. / NO. REQD / DATE
DEL TO / NO. REQD / DATE
SURFACE TREATMT -
IDENT METHOD TAG
PROJECT NUMBER no
PROJECT NAME N/A
DWG BY Allan DeMello — DATE 19-Oct-01
CHK BY D. Ostotz — DATE
APR BY D. Ostotz — DATE

ERNEST ORLANDO LAWRENCE
BERKELEY NATIONAL LABORATORY
UNIVERSITY OF CALIFORNIA - BERKELEY

SNS - FES MEBT
GENERAL
MEBT RAFT 1 ASSEMBLY

MICROFILMED:	DWG. TYPE	SHOWN ON	SCALE: 1/4	DO NOT SCALE PRINTS
	ASSEM	25B603	SHEET 2 OF 4	
PATENT CLEAR:	DESIGN ACCT. NO.	CATEGORY CODE	DWG. NO.	SIZE / REV.
-	-	FE3330	25B6106	A

25B6106 A 2

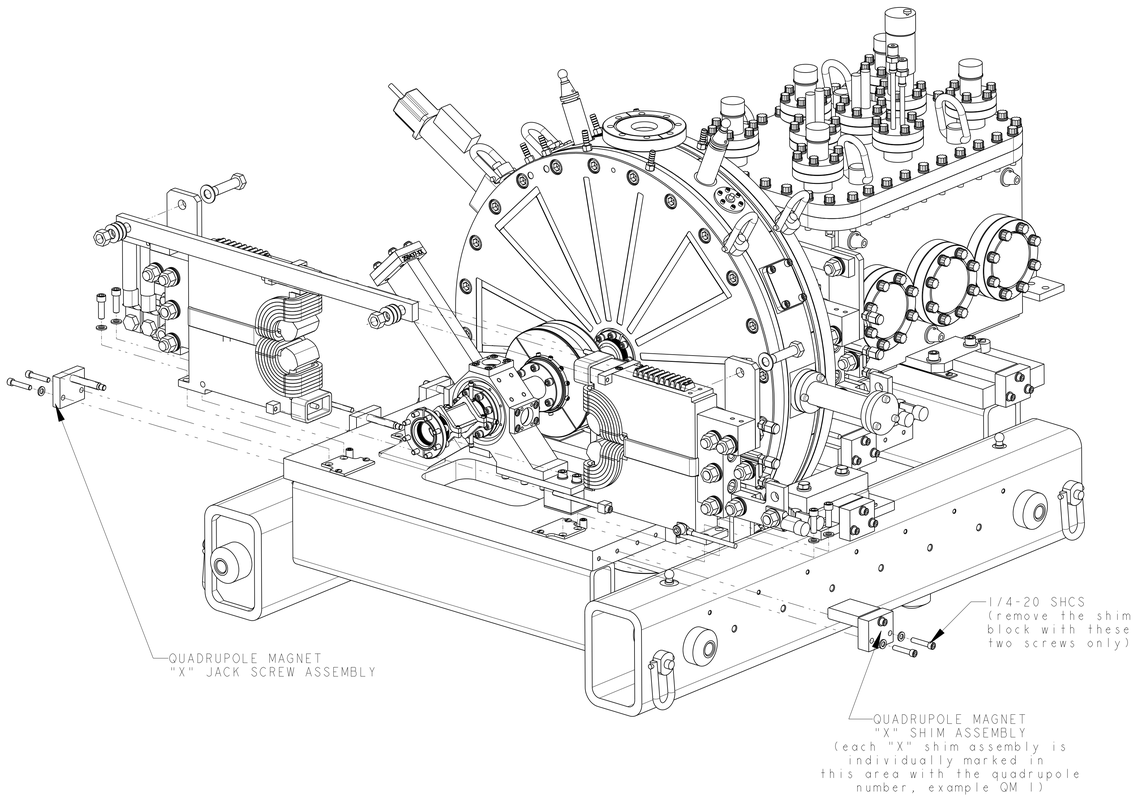

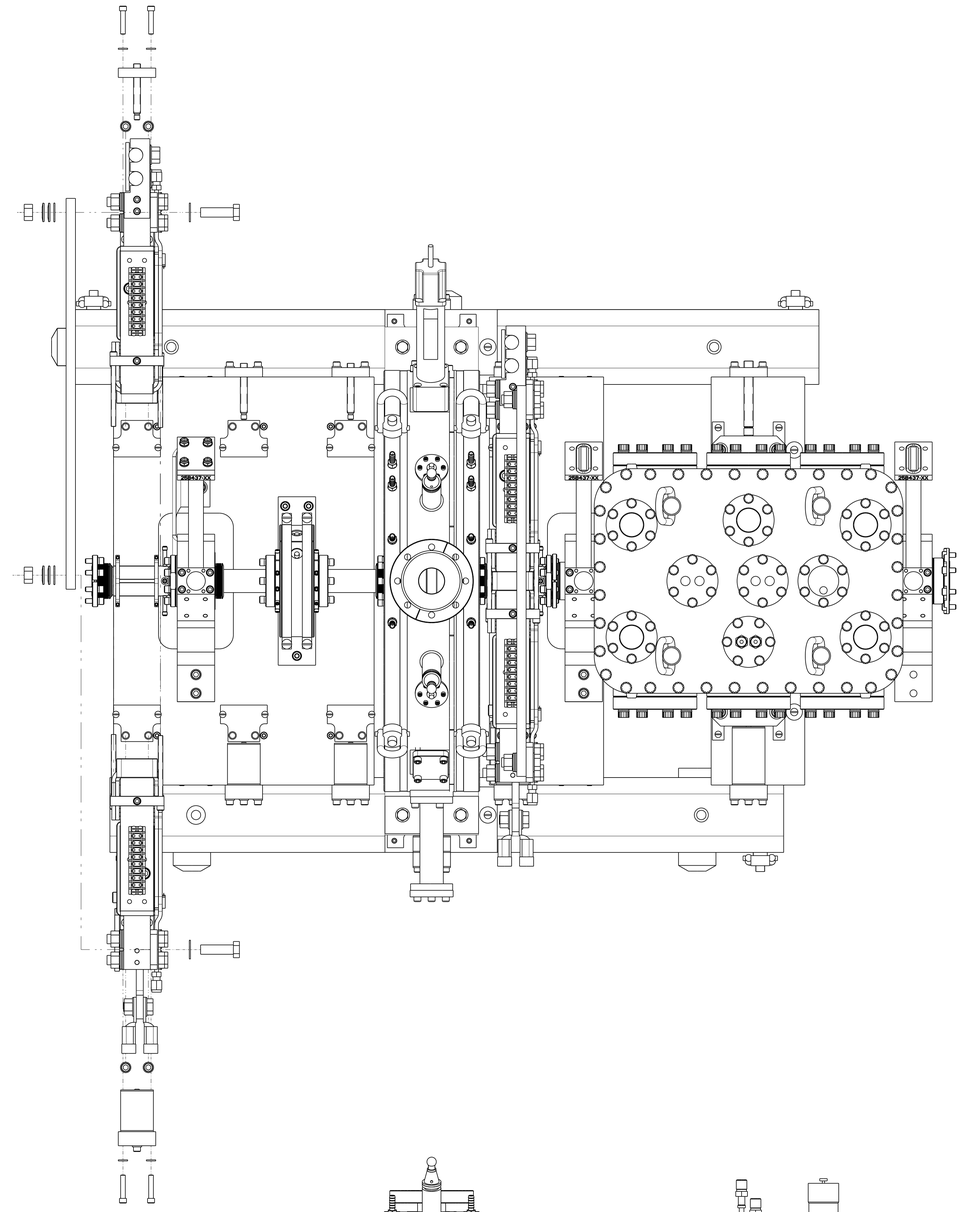

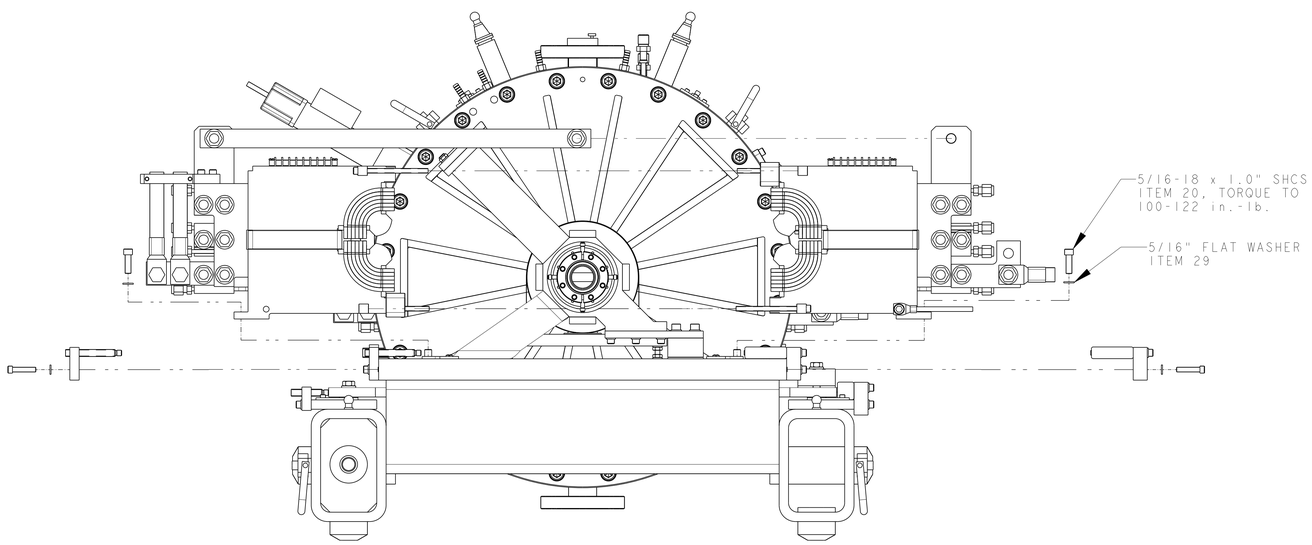

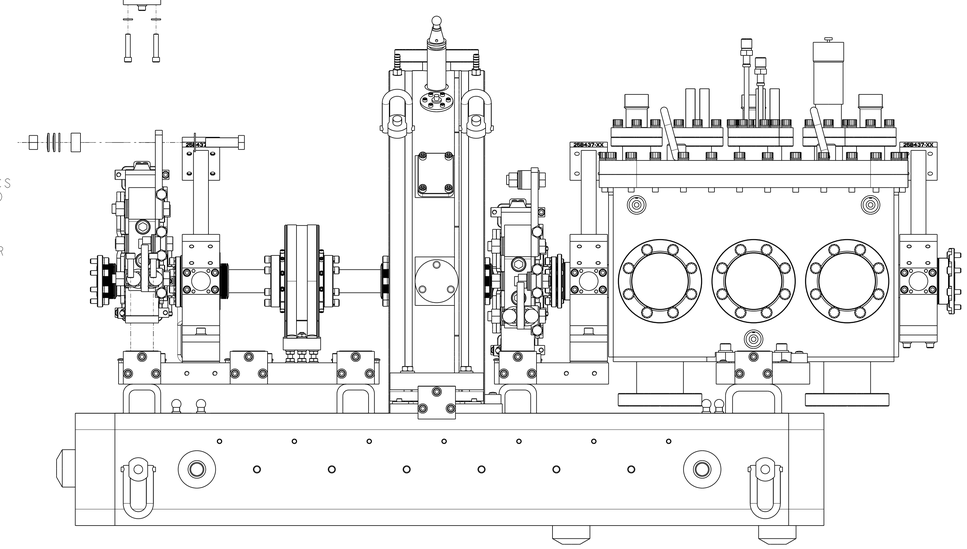

NOTE:

1. THIS DRAWING ILLUSTRATES THE QUADRUPOLE MAGNET SPLIT FOR ASSEMBLY AROUND THE BEAMLINE.
2. TWO QUADRUPOLES MAGNETS ARE REMOVED FOR CLARITY.

REV	DWG	CHK	ZONE	DATE	CHANGES
A	AD			3/02	INITIAL RELEASE

UNLESS OTHERWISE SPECIFIED
PROJECTION:
TOLERANCES: X.X ± 0.1 | FRAC. ± 1/64 | X.XX ± 0.03 | Angles ± 1.0° | X.XXX ± 0.010 | FINISH 125
DO NOT SCALE PRINT
THREADS ARE CLASS 2
CHAMFER ENDS OF ALL SCREW TREADS 30°
CUT ROUND, 1.5 THREAD RELIEF ON MACHINED THREADS
BREAK EDGES .016 MAX. ON MACHINED WORK
REMOVE BURRS, WELD SPLATTER & LOOSE SCALE
IN ACCORDANCE WITH ASME Y14.5M & B46.1

SHOP ORDERS
ACCT NO. | NO. REQD | SER NO. -
DEL TO | DATE ISSD -
SURFACE TREATMT -
IDENT METHOD TAG
PROJECT NUMBER na
PROJECT NAME N/A
DWG BY Allan DeMello | DATE 09-Nov-01
CHK BY D. Oshatz | DATE
APR BY D. Oshatz | DATE

ERNEST ORLANDO LAWRENCE
BERKELEY NATIONAL LABORATORY
UNIVERSITY OF CALIFORNIA - BERKELEY

SNS - FES MEBT
GENERAL
MEBT RAFT 1 ASSEMBLY

MICROFILMED:	DWG. TYPE	SHOWN ON	SCALE: 31/100	DO NOT SCALE PRINTS
	ASSEM	25B603	SHEET 3 OF 4	
PATENT CLEAR:	DESIGN ACCT. NO.	CATEGORY CODE	DWG. NO.	SIZE / REV.
	-	FE3330	25B6106	A

DWG. NO. 25B6106 SIZE A REV. 3

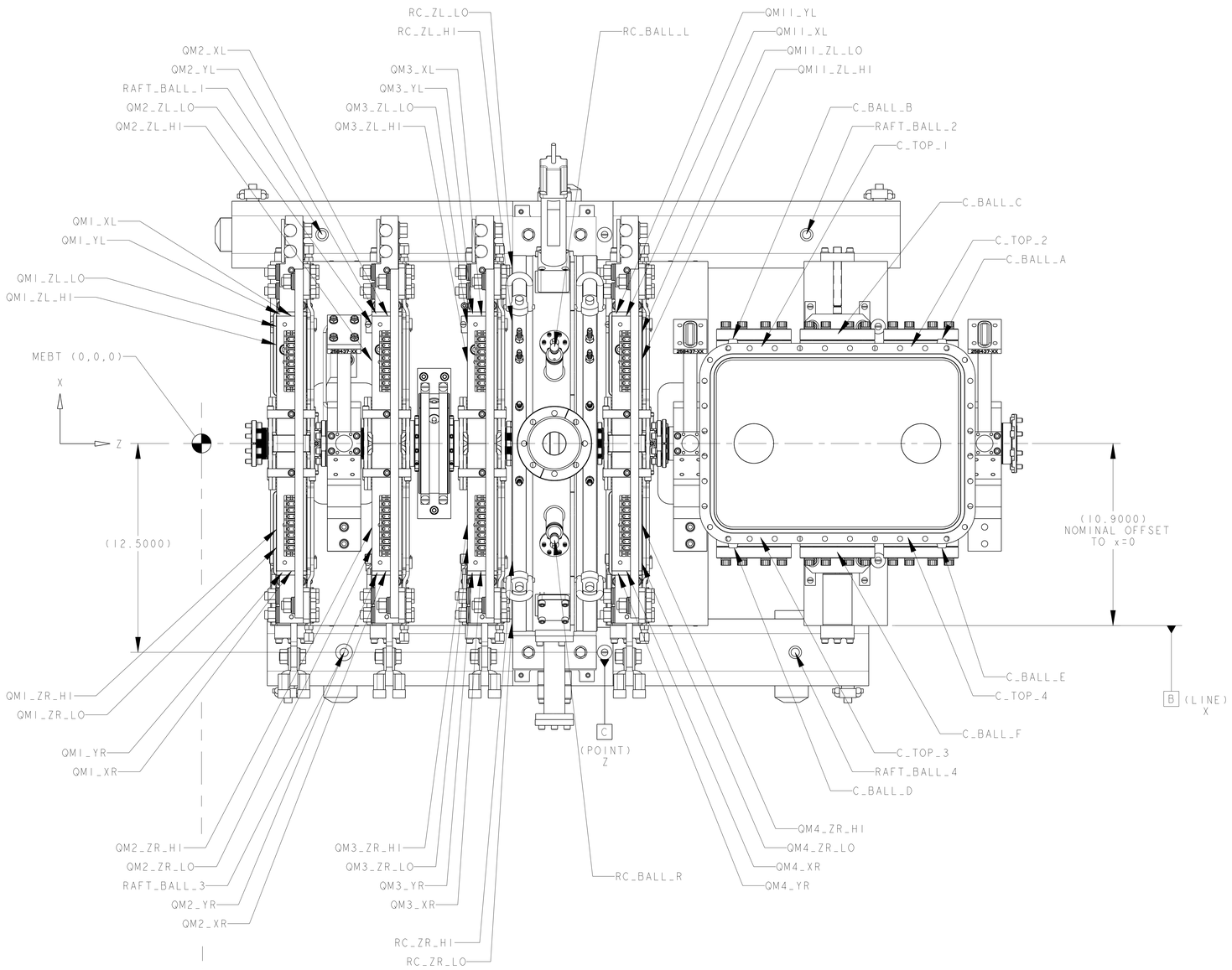

MEBT RAFT 1
CMM MEASUREMENT RESULTS

(ALL VALUES ARE IN INCHES)

LOCATION	MEASURED x	MEASURED y	MEASURED z	NOMINAL	DEVIATION	DESCRIPTION
QM1_XL	7.6262	—	—	7.6270	-0.0008	PLANE
QM1_YL	—	3.6829	—	3.6830	-0.0001	PLANE
QM1_YR	—	3.6827	—	3.6830	-0.0003	PLANE
QM1_XR	-7.6268	—	—	7.6270	0.0002	PLANE
QM1_ZR_HI	—	—	4.4362	4.4290	0.0072	POINT
QM1_ZR_LO	—	—	4.4343	4.4290	0.0053	POINT
QM1_ZL_HI	—	—	4.4337	4.4290	0.0047	POINT
QM1_ZL_LO	—	—	4.4343	4.4290	0.0053	POINT
QM2_XL	7.6255	—	—	7.6270	-0.0015	PLANE
QM2_YL	—	3.6833	—	3.6830	0.0003	PLANE
QM2_YR	—	3.6828	—	3.6830	-0.0002	PLANE
QM2_XR	-7.6275	—	—	7.6270	-0.0005	PLANE
QM2_ZR_HI	—	—	10.1439	10.1380	0.0059	POINT
QM2_ZR_LO	—	—	10.1437	10.1380	0.0057	POINT
QM2_ZL_HI	—	—	10.1414	10.1380	0.0034	POINT
QM2_ZL_LO	—	—	10.1436	10.1380	0.0056	POINT
QM3_XL	7.6263	—	—	7.6270	-0.0007	PLANE
QM3_YL	—	3.6831	—	3.6830	0.0001	PLANE
QM3_YR	—	3.6829	—	3.6830	-0.0001	PLANE
QM3_XR	-7.6269	—	—	7.6270	0.0001	PLANE
QM3_ZR_HI	—	—	15.8527	15.8460	0.0067	POINT
QM3_ZR_LO	—	—	15.8516	15.8460	0.0056	POINT
QM3_ZL_HI	—	—	15.8520	15.8460	0.0060	POINT
QM3_ZL_LO	—	—	15.8521	15.8460	0.0061	POINT
QM4_XL	7.6264	—	—	7.6270	-0.0006	PLANE
QM4_YL	—	3.6833	—	3.6830	0.0003	PLANE
QM4_YR	—	3.6826	—	3.6830	-0.0004	PLANE
QM4_XR	-7.6269	—	—	7.6270	0.0001	PLANE
QM4_ZR_HI	—	—	26.2757	26.2800	-0.0043	POINT
QM4_ZR_LO	—	—	26.2748	26.2800	-0.0052	POINT
QM4_ZL_HI	—	—	26.2762	26.2800	-0.0038	POINT
QM4_ZL_LO	—	—	26.2751	26.2800	-0.0049	POINT
C_BALL_A	6.7220	4.0888	44.2297	—	—	SPHERICITY
C_BALL_B	6.7159	4.0855	31.7439	—	—	SPHERICITY
C_BALL_C	6.7124	-3.0598	37.9862	—	—	SPHERICITY
C_BALL_D	-6.7305	4.0864	31.7533	—	—	SPHERICITY
C_BALL_E	-6.7255	4.0890	44.2438	—	—	SPHERICITY
C_BALL_F	-6.7198	-3.0634	37.9968	—	—	SPHERICITY
RAFT_BALL_1	12.5167	-6.5388	7.1843	—	—	SPHERICITY
RAFT_BALL_2	12.4967	-6.5652	36.1791	—	—	SPHERICITY
RAFT_BALL_3	-12.4878	-6.5454	8.4833	—	—	SPHERICITY
RAFT_BALL_4	-12.5078	-6.5593	35.4754	—	—	SPHERICITY
RC_BALL_R (Rebuncher #1)	-5.7483	13.9145	21.0443	—	—	SPHERICITY
RC_BALL_L (Rebuncher #1)	5.7730	13.9028	21.0288	—	—	SPHERICITY
RC_ZL_HI	—	—	18.4865	18.5035	-0.0170	POINT
RC_ZL_LO	—	—	18.4963	18.5035	-0.0072	POINT
RC_ZR_HI	—	—	18.4914	18.5035	-0.0121	POINT
RC_ZR_LO	—	—	18.5073	18.5035	0.0038	POINT
C_TOP_1	—	—	5.7134	5.7000	0.0134	POINT
C_TOP_2	—	—	5.7138	5.7000	0.0138	POINT
C_TOP_3	—	—	5.7114	5.7000	0.0114	POINT
C_TOP_4	—	—	5.7112	5.7000	0.0112	POINT

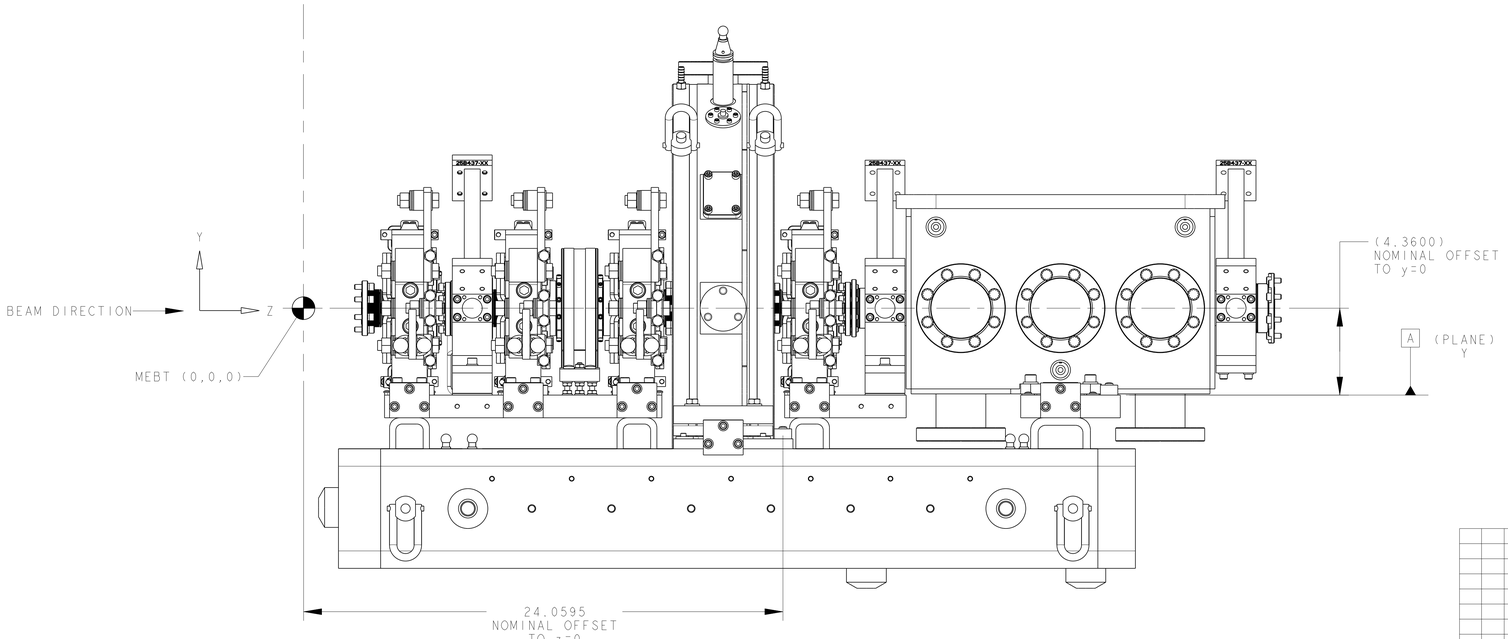

NOTE:

1. THIS DRAWING ILLUSTRATES THE LOCATIONS FROM WHICH FIDUCIAL DATA WAS TAKEN.
2. THE CHOPPER COVER IS REMOVED DURING MEASUREMENTS.

REV	DWG	CHK	ZONE	DATE	CHANGES
A	AD			3/02	INITIAL RELEASE

UNLESS OTHERWISE SPECIFIED
PROJECTION:
TOLERANCES: X.X ± 0.1 FRAC. ± 1/64; X.XX ± 0.03 Angles ± 1.0°; X.XXX ± 0.010 FINISH 125
DO NOT SCALE PRINT
THREADS ARE CLASS 2
CHAMFER ENDS OF ALL SCREW THREADS 30°
CUT ROUND, 1.5 THREAD RELIEF ON MACHINED THREADS
BREAK EDGES .016 MAX. ON MACHINED WORK
REMOVE BURRS, WELD SPLATTER & LOOSE SCALE
IN ACCORDANCE WITH ASME Y14.5M & B46.1

SHOP ORDERS
ACCT NO. / WO. / SER NO. / DATE / SHIP DATE / REQD DATE
DEL TO / SURFACE TREATMT / IDENT METHOD: TAG / PROJECT NUMBER: na / PROJECT NAME: N/A
DWG BY: Allan DeMello DATE 16-Oct-01
CHK BY: D. Oshatz DATE
APR BY: D. Oshatz DATE

ERNEST ORLANDO LAWRENCE BERKELEY NATIONAL LABORATORY
UNIVERSITY OF CALIFORNIA - BERKELEY

SNS - FES MEBT
GENERAL
MEBT RAFT 1 ASSEMBLY

MICROFILMED: | DWG. TYPE: ASSEM | SHOWN ON: 25B603 | SCALE: 33/100 | DO NOT SCALE PRINTS
SHEET 4 OF 4
PATENT CLEAR: | DESIGN ACCT. NO.: - | CATEGORY CODE: FE3330 | DWG. NO.: 25B6106 | SIZE: A | REV.: A

DWG. NO. 25B6106 SIZE A REV A SHT 4