NOTE:
1. ASSEMBLE IN CLEAN ENVIRONMENT. AFTER ASSEMBLY, WRAP TO MAINTAIN CLEANLINESS.
2. FINISHED PART TO BE VACUUM TIGHT. LEAK RATE NOT TO EXCEED 1X10E-8 torr l/sec. He.
3. PRIMARY DIMENSIONS: MM; SECONDARY: INCH. TOLERANCES ARE METRIC.
4. SUGGESTED VENDOR: MEWASA AG, SWITZERLAND. WWW.MEWASA.CH
   US REP: CT ASSOC., SAN JOSE, CA (408) 268-6950, CONTACT: CHUCK TROIANI.

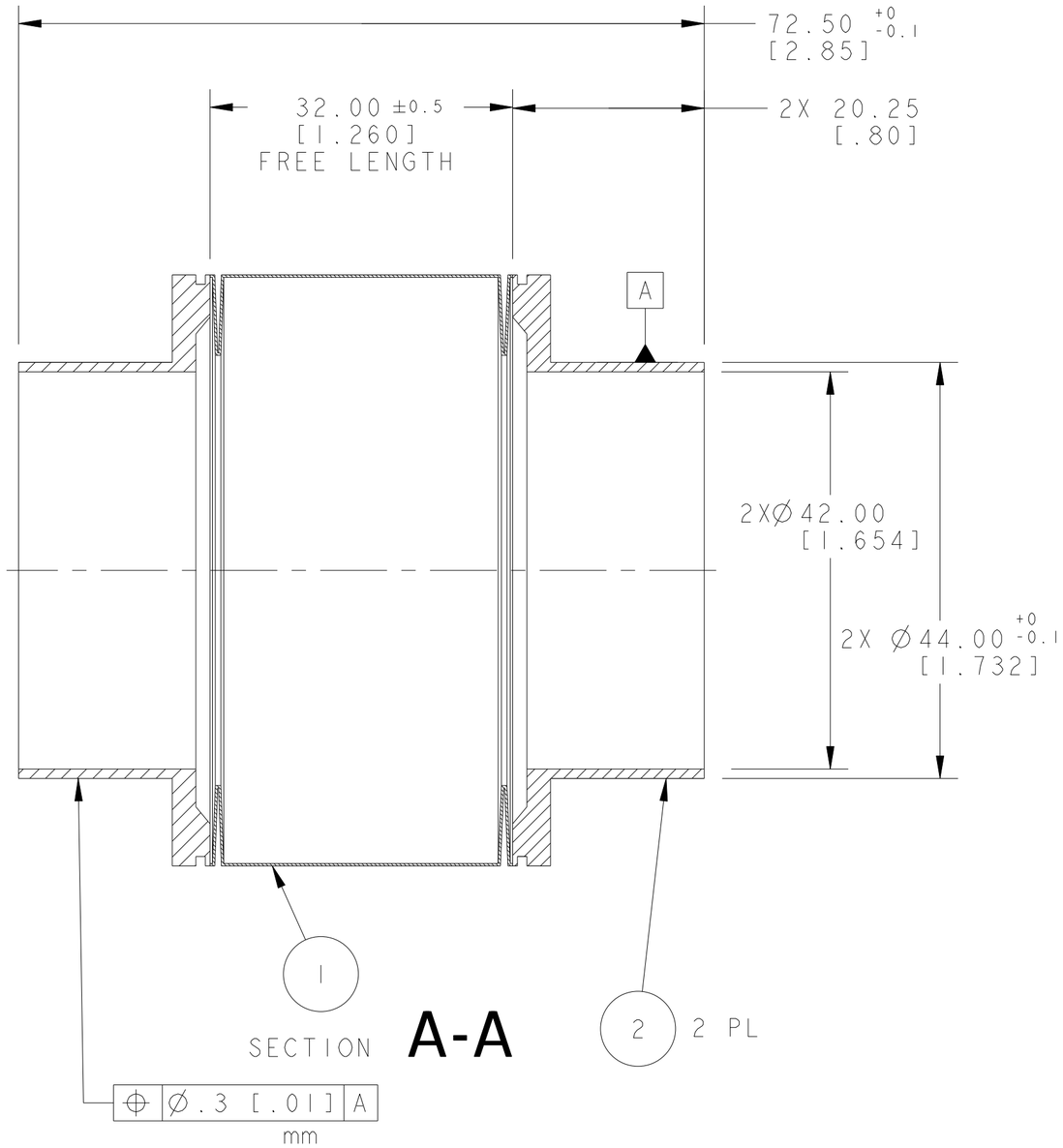

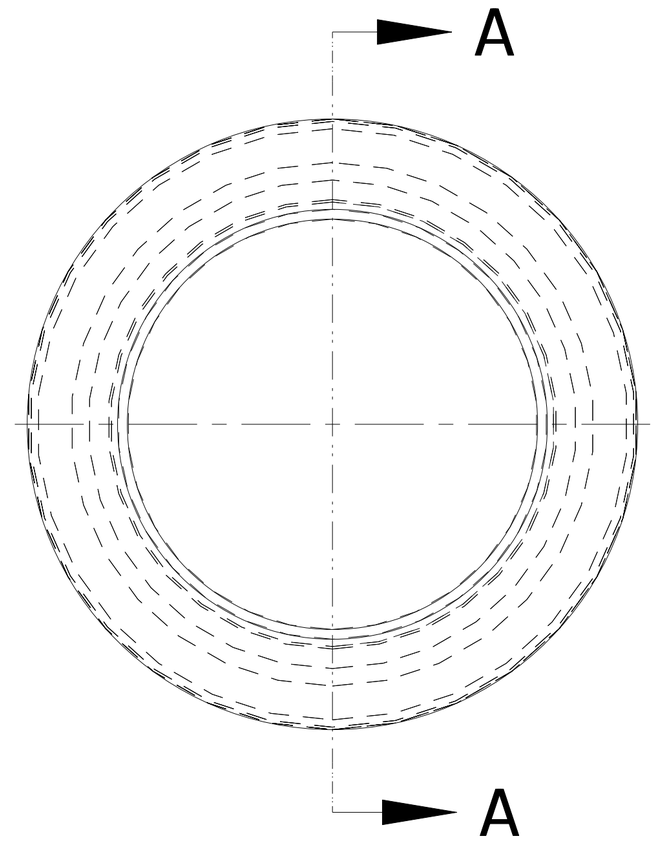

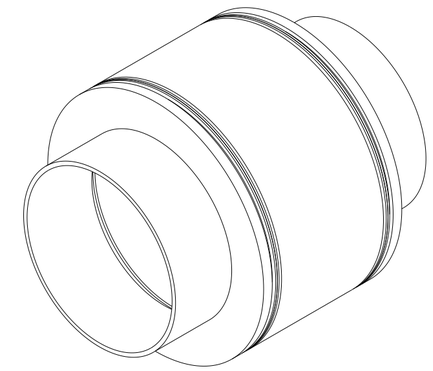

SCALE 1/1

ITEM	PART NO	REQD	DESCRIPTION	MATERIAL
2	-	2	END PIECE, TYPE N	316L
1	-	1	BELLOWS, NS DN40, 46.5/62.5, 20 CNV, 32MM FREE LENGTH	316L

REV	DWG	CHK	ZONE	DATE	CHANGES

UNLESS OTHERWISE SPECIFIED
PROJECTION:

TOLERANCES		
	X.X ± 0.3	FRAC. ± 1/64
	X.XX ± 0.01	Angles ± 1.0°
	X.XXX ± 0.000	FINISH 125

DO NOT SCALE PRINT
THREADS ARE CLASS 2
CHAMFER ENDS OF ALL SCREW TREADS 30°
CUT ROUND, 1.5 THREAD RELIEF ON MACHINED THREADS
BREAK EDGES .016 MAX. ON MACHINED WORK
REMOVE BURRS, WELD SPLATTER & LOOSE SCALE
IN ACCORDANCE WITH ASME Y14.5M & B46.1

SHOP ORDERS
SER NO. -
ACCT NO. | NO. REQD | DATE ISSD -
DEL TO | DATE REQD -
SURFACE TREATMT -
IDENT METHOD TAG
PROJECT NUMBER na
PROJECT NAME MEWASA
DWG BY - | DATE 20-Aug-01
CHK BY P LUFT | DATE
APR BY D OSHATZ | DATE

ERNEST ORLANDO LAWRENCE
BERKELEY NATIONAL LABORATORY
UNIVERSITY OF CALIFORNIA - BERKELEY

SNS-FES MEBT
BEAM PIPES
BELLOWS ASSEMBLY, BP7, 40MM

MICROFILMED:	DWG. TYPE	SHOWN ON	SCALE: 2/1	DO NOT SCALE PRINTS
	ASSEM	25B611	SHEET 1 OF 1	
PATENT CLEAR:	DESIGN ACCT. NO.	CATEGORY CODE	DWG. NO. 25B4993	SIZE A
	-	FE3312		

DWG. NO. 25B4993 SIZE A REV. SH. 1

Dwg. File: 25B499 Model File: 25B499