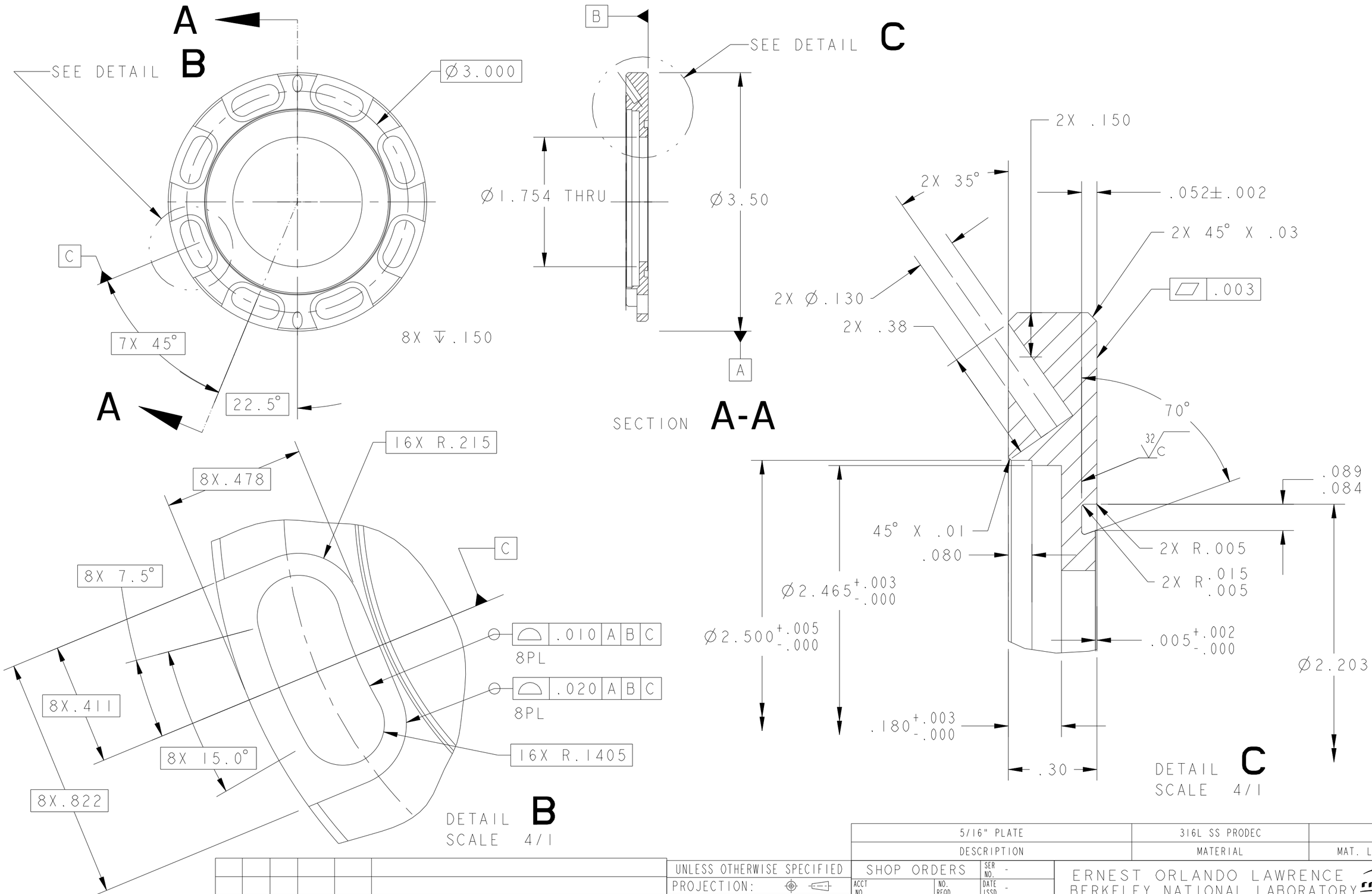

B	RLM	PAL	A1 B2 D2 C4/A2	8/14/01	OVERALL THICKNESS 2 PALCE DECIMALS REDIMENSION O-RING GROOVE SLOT WIDTH TO R.1405, REDEFINE SLOT BORE, REDIMENSION CHNG THRU Ø TO 1.754, CHANGED BORE ↧ TO .180
A	AZ	DO		7/01/01	INITIAL RELEASE
REV	DWG	CHK	ZONE	DATE	CHANGES

UNLESS OTHERWISE SPECIFIED
PROJECTION:

TOLERANCES		
	X.X ± 0.1	FRAC. ± 1/64
	X.XX ± 0.01	Angles ± 0.5°
	X.XXX ± 0.005	FINISH 125

DO NOT SCALE PRINT
THREADS ARE CLASS 2
CHAMFER ENDS OF ALL SCREW TREADS 30°
CUT ROUND, 1.5 THREAD RELIEF ON MACHINED THREADS
BREAK EDGES .016 MAX. ON MACHINED WORK
REMOVE BURRS, WELD SPLATTER & LOOSE SCALE
IN ACCORDANCE WITH ASME Y14.5M & B46.1

5/16" PLATE	316L SS PRODEC	-
DESCRIPTION	MATERIAL	MAT. LOCATION

SHOP ORDERS
SER NO. -
ACCT NO. | NO. REQD | DATE ISSD -
DEL TO | DATE REQD -
SURFACE TREATMT ELECTROPOLISH
IDENT METHOD TAG
PROJECT NUMBER na
PROJECT NAME -
DWG BY Andrew Zachoszcz | DATE 03-Jul-01
CHK BY DARYL OSHATZ | DATE
APR BY DARYL OSHATZ | DATE

ERNEST ORLANDO LAWRENCE
BERKELEY NATIONAL LABORATORY
UNIVERSITY OF CALIFORNIA - BERKELEY

SNS - FES MEBT
MECHANICAL SUBSYSTEMS
40 MM FLANGE

MICROFILMED:	DWG. TYPE	SHOWN ON	SCALE: 1/1	DO NOT SCALE PRINTS
	PART	-	SHEET 1 OF 1	
PATENT CLEAR:	DESIGN ACCT. NO.	CATEGORY CODE	DWG. NO. SIZE	REV.
	-	FE3313	25B4473	B

DWG. NO. 25B4473 SIZE B REV. SH. 1

Dwg. File: 25B447 Model File: 25B447