DWG. NO.	SIZE	REV.	SH.
25B4334	B		1

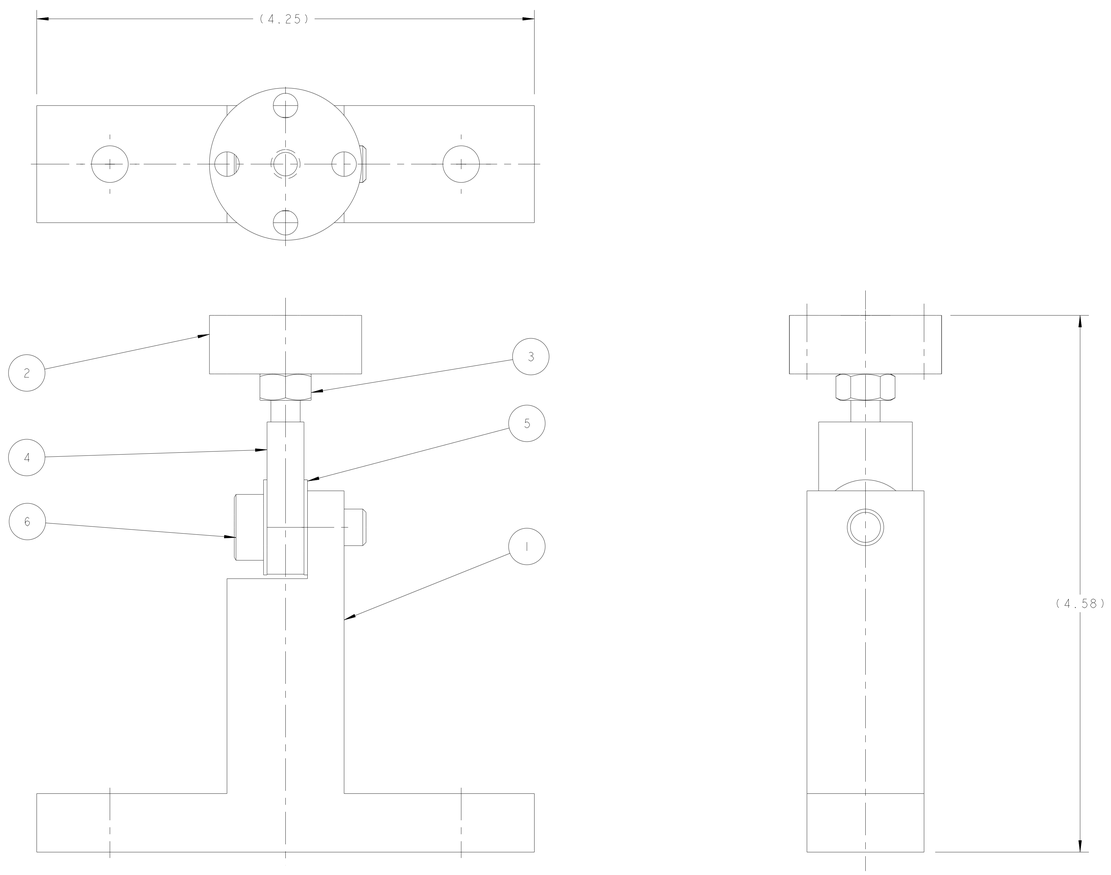

ITEM	PART NO	REQD	DESCRIPTION	MATERIAL
6	PZ-40	1	SHOULDER SCREW, PZ-39	BERG CATALOG
5	98370A030	2	3/8 FLAT WASHER, 1/8" THK, MCMASTER-CARR OR EQUIV.	-
4	25B446	1	ROD END	304 SS
3	-	1	1/4-20 UNC HEX. HD. NUT	18-8 SS
2	25B435	1	MICROMETER INTERFACE FLANGE	304 SS
1	25B434	1	CHOPPER BALL JOINT BRACKET	304 SS

NOTES:

1. ULTRA-HIGH VACUUM CLEANING AND PACKING REQUIRED.
2. ASSEMBLE IN CLEAN ENVIRONMENT.
   AFTER ASSEMBLY, WRAP TO MAINTAIN CLEANLINESS.

REV	DWG	CHK	ZONE	DATE	CHANGES
B	AZ	DO		7/18/01	ITEM 4 ROD END WAS REDESIGNED
A	AZ	DO		7/16/01	INITIAL RELEASE

UNLESS OTHERWISE SPECIFIED
PROJECTION:
TOLERANCES: X.X ± 0.1 FRAC. ± 1/64 X.XX ± 0.03 Angles ± 1.0° X.XXX ± 0.010 FINISH
DO NOT SCALE PRINT
THREADS ARE CLASS 2
CHAMFER ENDS OF ALL SCREW THEADS 30°
CUT ROUND, 1.5 THREAD RELIEF ON MACHINED THREADS
BREAK EDGES .016 MAX. ON MACHINED WORK
REMOVE BURRS, WELD SPLATTER & LOOSE SCALE
IN ACCORDANCE WITH ASME Y14.5M & B46.1

SHOP ORDERS
ACCT NO. | NO. REQD | SER NO. -
DEL TO | DATE ISSD -
SURFACE TREATMT - | DATE REQD -
IDENT METHOD TAG
PROJECT NUMBER na
PROJECT NAME N/A
DWN By A. ZACHOSZCZ | DATE 18-Jan-01
CHK By None | DATE
APR By None | DATE

ERNEST ORLANDO LAWRENCE
BERKELEY NATIONAL LABORATORY
UNIVERSITY OF CALIFORNIA - BERKELEY

SNS - FES MEBT
BEAM TRANSPORT SYSTEMS
CHOPPER BALL JOINT ASSEMBLY

MICROFILMED: | DWG. TYPE ASSEM | SHOWN ON - | SCALE: 2/1 | DO NOT SCALE PRINTS
SHEET 1 OF 1
PATENT CLEAR: | DESIGN ACCT. NO. - | CATEGORY CODE FE3312 | DWG. NO. 25B4334 | SIZE B | REV.