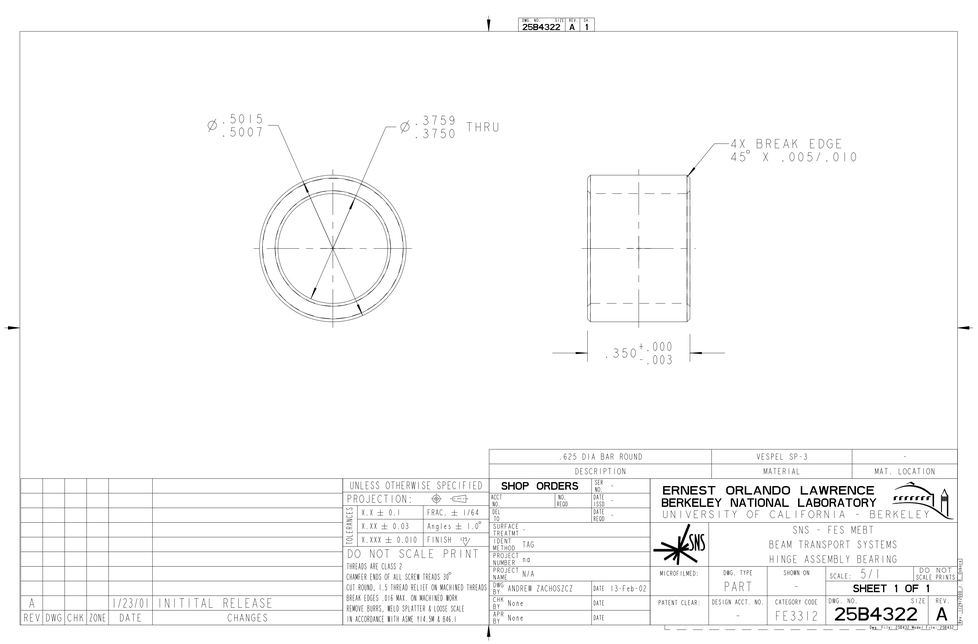

.625 DIA BAR ROUND			VESPEL SP-3		-
DESCRIPTION			MATERIAL		MAT. LOCATION

REV	DWG	CHK	ZONE	DATE	CHANGES
A				1/23/01	INITITAL RELEASE

UNLESS OTHERWISE SPECIFIED
PROJECTION:
TOLERANCES: X.X ± 0.1 FRAC. ± 1/64; X.XX ± 0.03 Angles ± 1.0°; X.XXX ± 0.010 FINISH 125
DO NOT SCALE PRINT
THREADS ARE CLASS 2
CHAMFER ENDS OF ALL SCREW TREADS 30°
CUT ROUND, 1.5 THREAD RELIEF ON MACHINED THREADS
BREAK EDGES .016 MAX. ON MACHINED WORK
REMOVE BURRS, WELD SPLATTER & LOOSE SCALE
IN ACCORDANCE WITH ASME Y14.5M & B46.1

SHOP ORDERS
ACCT NO. | NO. REQD | SER NO. - | DATE ISSD - | DEL TO | DATE REQD -
SURFACE TREATMT -
IDENT METHOD TAG
PROJECT NUMBER no
PROJECT NAME N/A
DWG BY ANDREW ZACHOSZCZ DATE 13-Feb-02
CHK BY None DATE
APR BY None DATE

ERNEST ORLANDO LAWRENCE
BERKELEY NATIONAL LABORATORY
UNIVERSITY OF CALIFORNIA - BERKELEY

SNS - FES MEBT
BEAM TRANSPORT SYSTEMS
HINGE ASSEMBLY BEARING

MICROFILMED:
DWG. TYPE PART
SHOWN ON -
SCALE: 5/1
DO NOT SCALE PRINTS
SHEET 1 OF 1
PATENT CLEAR:
DESIGN ACCT. NO. -
CATEGORY CODE FE3312
DWG. NO. 25B4322
SIZE
REV. A