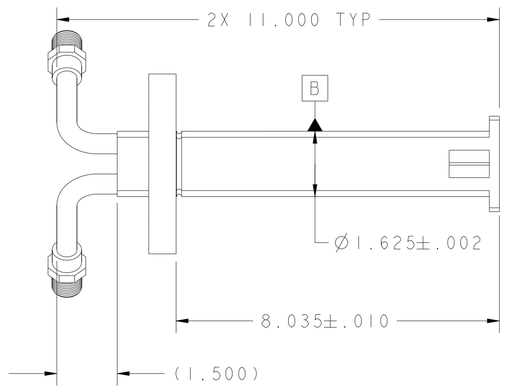

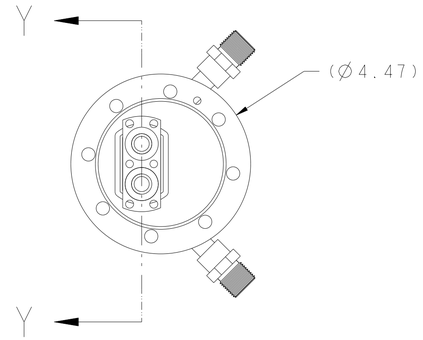

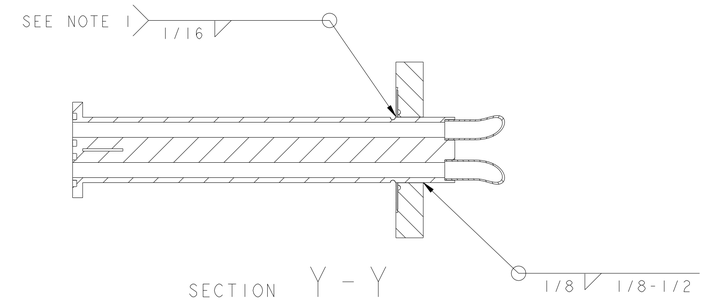

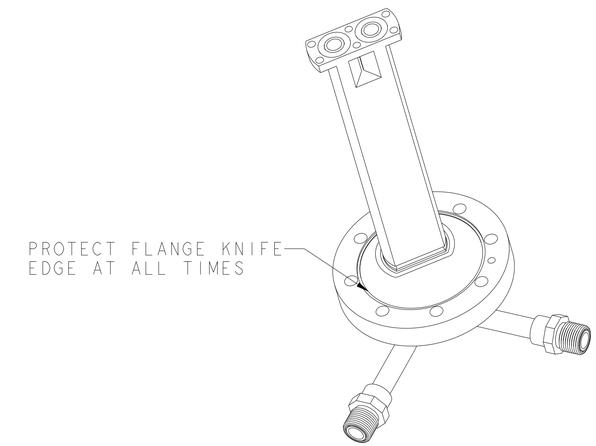

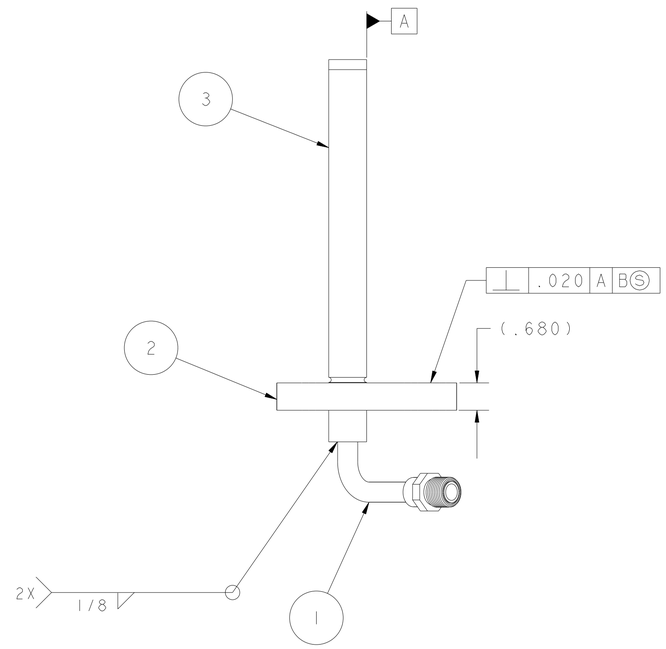

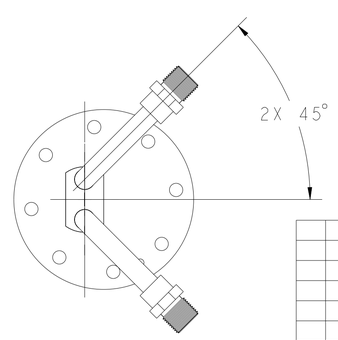

NOTES:

1. FINISHED PART TO BE VACUUM TIGHT.
   LEAK RATE NOT TO EXCEED 1 X 10^-8 TORR - LITERS PER SECOND HELIUM.
2. ULTRA-HIGH VACUUM CLEANING AND PACKING REQUIRED.
3. ASSEMBLE IN CLEAN ENVIRONMENT.
   AFTER ASSEMBLY AND WELDING, WRAP TO MAINTAIN CLEANLINESS.

ITEM	PART NO	REQD	DESCRIPTION	MATERIAL
3	25B415	1	WATER MANIFOLD INLET/OUTLET TUBE	304 SS
2	25B414	1	WATER MANIFOLD CONFLAT FLANGE	304 SS
1	25B417	2	RIGHT ANGLE COOLING TUBE	-

REV	DWG	CHK	ZONE	DATE	CHANGES
B2	AD		D7	1/22/01	CHANGE DIMENSION 9.320±.010 TO 8.035±.010
B1	AD		D7	1/22/01	CHANGE DIMENSION 2X 13.250 TYP. TO 2X 11.000 TYP.
A	AD			1/04/01	RELEASE FOR QUOTE

UNLESS OTHERWISE SPECIFIED
PROJECTION:
TOLERANCES: X.X ± 0.1 FRAC. ± 1/64; X.XX ± 0.03 Angles ± 1.0°; X.XXX ± 0.010 FINISH 125
DO NOT SCALE PRINT
THREADS ARE CLASS 2
CHAMFER ENDS OF ALL SCREW TREADS 30°
CUT ROUND, 1.5 THREAD RELIEF ON MACHINED THREADS
BREAK EDGES .016 MAX. ON MACHINED WORK
REMOVE BURRS, WELD SPLATTER & LOOSE SCALE
IN ACCORDANCE WITH ASME Y14.5M & B46.1

SHOP ORDERS
ACCT NO. / NO. REQD / SER NO. -
DEL TO / DATE ISSD -
DATE REQD -
SURFACE TREATMT
IDENT METHOD TAG
PROJECT NUMBER
PROJECT NAME
DWG BY Allan DeMello DATE 22-Nov-00
CHK BY D. Oshatz DATE
APR BY D. Oshatz DATE

ERNEST ORLANDO LAWRENCE BERKELEY NATIONAL LABORATORY
UNIVERSITY OF CALIFORNIA - BERKELEY

SNS - FES MEBT
CHOPPER TARGET
WATER MANIFOLD

MICROFILMED: | DWG. TYPE ASSEM | SHOWN ON 25B400 | SCALE: 1/2 | DO NOT SCALE PRINTS
SHEET 1 OF 1
PATENT CLEAR: | DESIGN ACCT. NO. - | CATEGORY CODE FE3312 | DWG. NO. 25B4134 | SIZE | REV. B

Dwg. File: 25B4134 Model File: 25B415