STEP 1

NOTE:

1. ENTER DESIRED NOMINAL STRUT LENGTH IN COLUMN "A", SUBTRACT 8.350 FROM "A" AND ENTER REMAINDER IN COLUMN "B". THIS IS THE LENGTH OF THE TUBE (ITEM 1).
2. CUT THE TUBE (ITEM 1) TO LENGTH "B" AS DETERMINED IN STEP 1, NOTE 1.
3. WELD STRUT TUBE ENDS (ITEMS 2 & 3) TO TUBE (ITEM 1).
4. ELECTROLESS NICKEL PLATE ENTIRE WELDMENT TO A PLATING THICKNESS OF .0003" MIN / .0008" MAX.

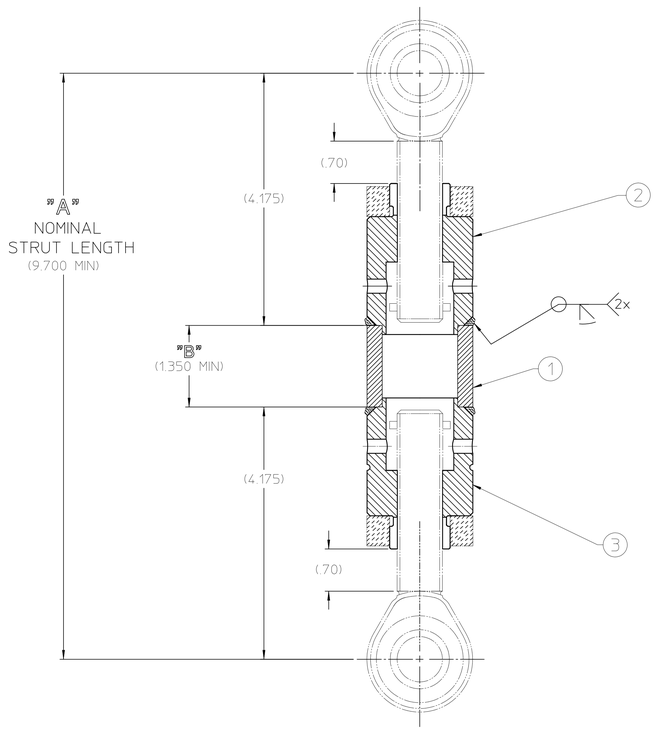

Part Number	[Nominal Strut Length] "A"	["A" minus 8.350 =] "B" ± .025	NOTES
25B3626-1	27.75	19.40	RFQ VERTICAL STRUT
25B3626-2	28.00	19.65	RFQ HORIZONTAL STRUT
25B3626-3	14.50	6.15	RFQ Z STRUT 1
25B3626-4	61.50	53.15	RFQ Z STRUT 2
25B3626-5	33.00	24.65	MEBT VERTICAL STRUT
25B3626-6	30.88	22.53	MEBT HORIZONTAL STRUT
25B3626-7	24.50	16.15	MEBT Z STRUT

STEP 2

ASSEMBLY GUIDELINES

1. ADJUSTMENT RATE = .125" CHANGE IN LENGTH PER FULL REVOLUTION OF STRUT TUBE.
   a) OVERALL ADJUSTMENT RANGE = ±1.40"
2. SPRAY COAT THREADS OF STRUT ROD ENDS (ITEMS 4 & 5) WITH ACHESON AERODAG-G LUBRICANT (ITEM 8).
3. STRUT ASSEMBLY AND TORQUE INSTRUCTIONS:

   a) THREAD ROD END - LEFT HAND THREAD (ITEM 5) INTO GROOVED END OF STRUT WELDMENT.

   b) THREAD ROD END - RIGHT HAND THREAD (ITEM 3) INTO OPPOSITE END OF STRUT WELDMENT.

   c) INSTALL SPRING PIN (ITEM 6) THROUGH STRUT STUB END HOLES INTO ROD END HOLES. CENTER SPRING PIN IN ROD END.

   d) SET STRUT ASSEMBLY TO NONIMAL STRUT LENGTH "A" WITH STRUT BODY CENTERED IN SPAN.

   e) RESTRAIN ONE ROD END FROM ROTATING WITH RESPECT TO THE STRUT TUBE.

   f) TIGHTEN CLAMP COLLAR (ITEM 7) UNTIL A TORQUE OF 8-10 ft/lbs IS REQUIRED TO ROTATE THE STRUT TUBE ABOUT THE ROD END.

   g) REPEAT e) AND f) FOR OPPOSITE ROD END.

   h) RECHECK STRUT ASSEMBLY FOR NOMINAL STRUT LENGTH "A" AND CORRECT AS NECESSARY.

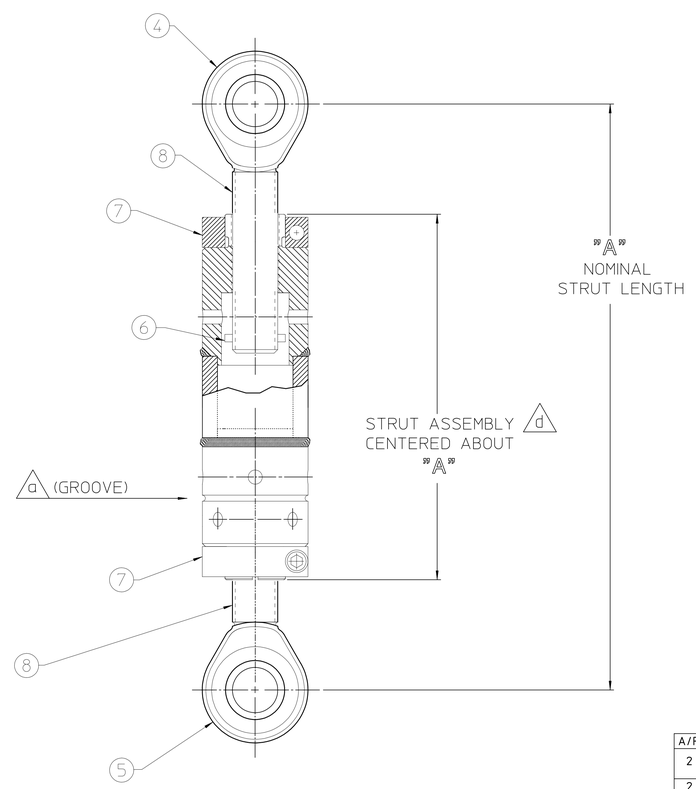

25B3626A

REQD	ITEM	PART NO.	DESCRIPTION
A/R	8	-------	Acheson Aerodag-G Lubricant
2	7	7L100	Clamp Collar - Low Profile, One Piece, 1" Bore x 1.75 OD .50 Wide Stl Stafford
2	6	-------	Spring Pin - Ø1/8 x 1.0 lg McMaster Carr
1	5	25D5753	3/4" Strut Rod End - LH Fine Thread
1	4	25D5743	3/4" Strut Rod End - RH Fine Thread
1	3	25D5733	3/4" Strut Stub End - LH Thread
1	2	25D5723	3/4" Strut Stub End - RH Thread
1	1	-------	Tube, Round - 1.75" O.D. x .25 thk Wall DOM STL

REV	DWG	CHK	ZONE	DATE	CHANGES
A	RLOW			4/24/01	ADDED 25B3626-5,-6 &-7
-	AW		-	01/16/01	ADDAPTED FROM 25D8986H

UNLESS OTHERWISE SPECIFIED
TOLERANCES: .X ± FRAC. ± ; .XX ± ANGLES ± ; .XXX ± FINISH √
THREADS ARE CLASS 2
CHAMFER ENDS OF ALL SCREW THREADS 30° CUT 1.5 PITCH THRD RELIEF WITH ROUND NOSE TOOL ON MACHINE CUT THREADS.
BREAK EDGES .016 MAX. ON MACHINED WORK
REMOVE BURRS WELD SPLATTER & LOOSE SCALE
REFERENCES: ASME Y14.5M - 1994

SHOP ORDERS
ACCT. NO. | SERIAL NO.
DATE ISSD | DATE REQD. | NO. REQD.
DELIVER TO
SURFACE TREATMENT
IDENT. METH. TAG
DWG. BY lim DATE 08/27/99
CHK. BY T LAURITZEN DATE 08/27/99

LAWRENCE BERKELEY LABORATORY
UNIVERSITY OF CALIFORNIA-BERKELEY
SNS-FES RFQ
MECHANICAL SUBSYSTEMS
3/4" BASIC TURNBUCKLE STRUT

PATENT CLEAR	DWG. TYPE ASSY	SHOWN ON	SCALE NONE	DO NOT SCALE PRINTS
MICROFILMED	DESIGN ACCT. NO.	CATEGORY CODE FE3212	DWG. NO. 25B3626	SIZE A	REV.