NOTES

1. FINISHED PART TO BE VACUUM TIGHT. LEAK RATE NOT TO EXCEED 1x10^-8 torr l/sec. He.

ALL WELDS ARE TO BE MINIMUM HEAT FUSION WELDS. ASSEMBLE AS FOLLOWS:

- 1.1. ALIGN BORE TUBE (25B173) WITH ELECTRODE SPOOL (25B174) USING ASSEMBLY TOOL 25B676-1. SECURE WITH TOOL 25B626-2, AND WELD.
- 1.2. MOUNT HEAT SINK 25B676-3 TO SMA FEED THRU (25B171), ASSEMBLE TO SUB-ASSEMBLY OF 1.1, (ABOVE). SECURE WITH TOOL 25B676-4 AND WELD, 4 PLACES. DO NOT OVERHEAT FEED THRU.
- 1.3. LEAK CHECK ASSEMBLY AND REPAIR IF REQUIRED.
- 1.4. SPOT WELD PER LBNL ENGINEERING NOTE FE-ME-042. LEAK CHECK ASSEMBLY.
- 1.5. ALIGN SUB-ASSEMBLY OF 1.4 (ABOVE) WITH FIXED FLANGE (25B176). SECURE WITH TOOL 25B676-2 AND WELD.
- 1.6 USE AEROSEAL CLAMP OR EQUAL TO ALIGN SEAL FLANGE (25B175) WITH BELLOWS (25B186). WELD.
- 1.7 ALIGN SUB-ASSEMBLY OF 1.5 (ABOVE) WITH SUB-ASSEMBLY OF 1.6 (ABOVE) AS DESCRIBED IN 1.6. WELD.
- 1.8. LEAK CHECK.

2. ASSEMBLE IN CLEAN ENVIRONMENT. AFTER ASSEMBLY, WRAP TO MAINTAIN CLEANLINESS.

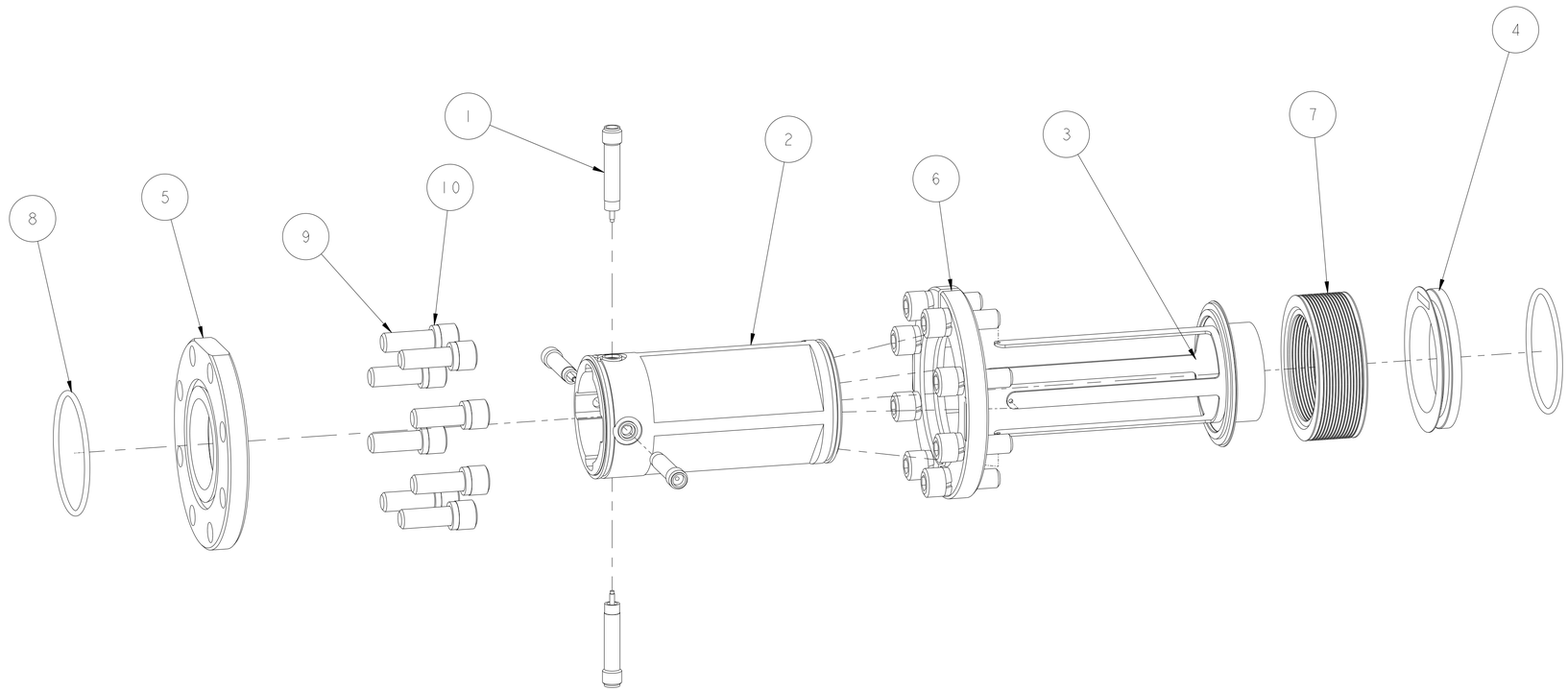

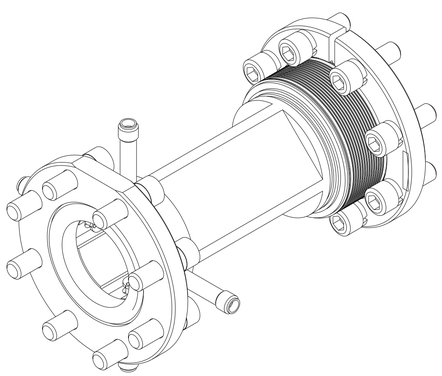

ITEM	PART NO	REQD	DESCRIPTION	MATERIAL
10	-	16	LOCK WASHER, SPRING, HIGH COLLAR, .25"	SS 18-8
9		16	SCR, SCH, .25-28 UNF X .75 LG	SS 18-8
8		2	2-029 O-RING SEAL	VITON
7	25B186	1	30 MM QMI BPM BELLOWS	347 STAINLESS STEEL
6	25B177	1	30 MM BP/ BPM SPLIT FLANGE	SS 304L
5	25B176	1	30 MM BPM FIXED FLANGE	316 STAINLESS STEEL
4	25B175	1	30 MM BPM/BP BELLOWS SEAL FLANGE	316 STAINLESS STEEL
3	25B174	1	30 MM BPM ELECTRODE SPOOL	316 STAINLESS STEEL
2	25B173	1	30 MM BPM BORE TUBE	316 STAINLESS STEEL
1	25B171	4	BPM SMA FEED THRU	-

REV	DWG	CHK	ZONE	DATE	CHANGES
B	PL	DPO		2/10/02	ADDED NOTES 1.1-1.8. 1/4-28 SCREWS WERE 1/4-20. 1/4" HI-COLLAR WASHERS WERE FLAT, NARROW. B/M ITEMS RENUMBERED.
A				5/23/00	INITIAL RELEASE

UNLESS OTHERWISE SPECIFIED
PROJECTION:
TOLERANCES: X.X ± 0.1 FRAC. ± 1/64; X.XX ± 0.03 Angles ± 0.5°; X.XXX ± 0.010 FINISH 125
DO NOT SCALE PRINT
THREADS ARE CLASS 2
CHAMFER ENDS OF ALL SCREW TREADS 30°
CUT ROUND, 1.5 THREAD RELIEF ON MACHINED THREADS
BREAK EDGES .016 MAX. ON MACHINED WORK
REMOVE BURRS, WELD SPLATTER & LOOSE SCALE
IN ACCORDANCE WITH ASME Y14.5M & B46.1

SHOP ORDERS
ACCT NO. - NO. REQD -
DEL TO -
SER NO. - DATE ISSD - DATE REQD -
SURFACE TREATMT SEE NOTES (PAGE 2)
IDENT METHOD TAG
PROJECT NUMBER 25B187
PROJECT NAME
DWG BY TREVOR GOULDING DATE 23-May-00
CHK BY DPO DATE -
APR BY DPO DATE -

ERNEST ORLANDO LAWRENCE BERKELEY NATIONAL LABORATORY
UNIVERSITY OF CALIFORNIA - BERKELEY

SNS

SMS-FES MEBT
MECHANICAL SUBSYSTEMS
30 MM QMI BEAM POSITION MONITOR

MICROFILMED:
DWG. TYPE: ASSEM
SHOWN ON
SCALE: 1/1
DO NOT SCALE PRINTS
SHEET 1 OF 2
PATENT CLEAR:
DESIGN ACCT. NO.
CATEGORY CODE: FE3313
DWG. NO.: 25B1874
SIZE
REV.: B

Dwg. File: 25B187 Model File: 25B187

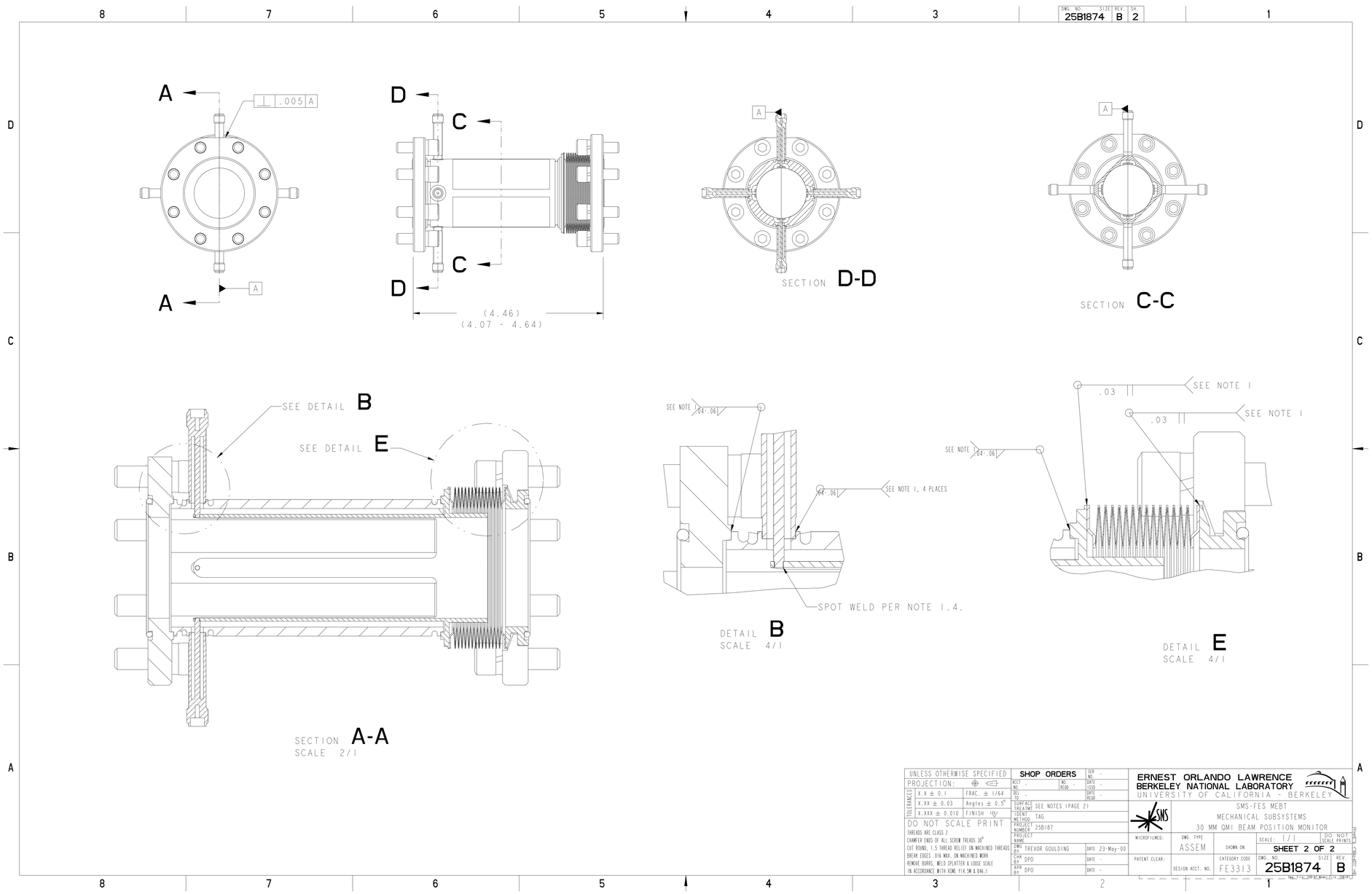

UNLESS OTHERWISE SPECIFIED
PROJECTION:
TOLERANCES: X.X ± 0.1 | FRAC. ± 1/64 | X.XX ± 0.03 | Angles ± 0.5° | X.XXX ± 0.010 | FINISH 125
DO NOT SCALE PRINT
THREADS ARE CLASS 2
CHAMFER ENDS OF ALL SCREW TREADS 30°
CUT ROUND, 1.5 THREAD RELIEF ON MACHINED THREADS
BREAK EDGES .016 MAX. ON MACHINED WORK
REMOVE BURRS, WELD SPLATTER & LOOSE SCALE
IN ACCORDANCE WITH ASME Y14.5M & B46.1

SHOP ORDERS
SER NO. -
ACCT NO. - | NO. REQD - | DATE ISSD -
DEL TO - | DATE REQD -
SURFACE TREATMT SEE NOTES (PAGE 2)
IDENT METHOD TAG
PROJECT NUMBER 25B187
PROJECT NAME -
DWG BY TREVOR GOULDING | DATE 23-May-00
CHK BY DPO | DATE -
APR BY DPO | DATE -

ERNEST ORLANDO LAWRENCE
BERKELEY NATIONAL LABORATORY
UNIVERSITY OF CALIFORNIA - BERKELEY

SMS-FES MEBT
MECHANICAL SUBSYSTEMS
30 MM QMI BEAM POSITION MONITOR

MICROFILMED:
DWG. TYPE ASSEM
SHOWN ON
SCALE: 1/1
DO NOT SCALE PRINTS
SHEET 2 OF 2
PATENT CLEAR:
DESIGN ACCT. NO.
CATEGORY CODE FE3313
DWG. NO. 25B1874 SIZE B REV.