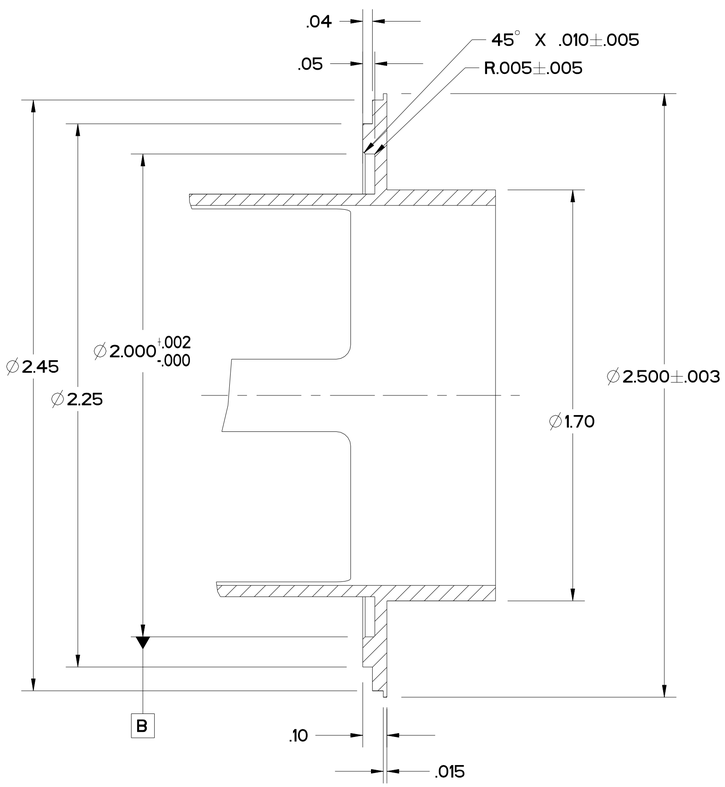

DETAIL B
SCALE 3/1

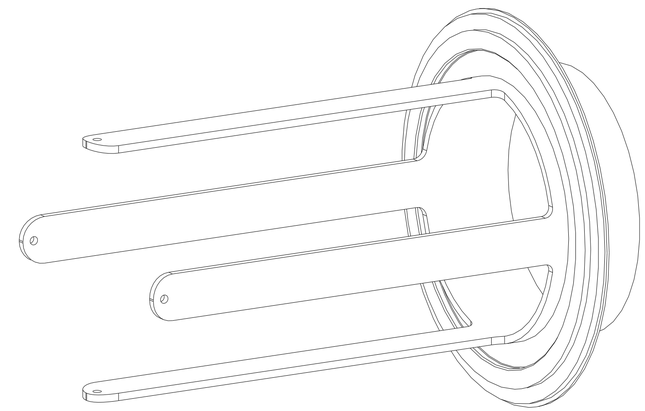

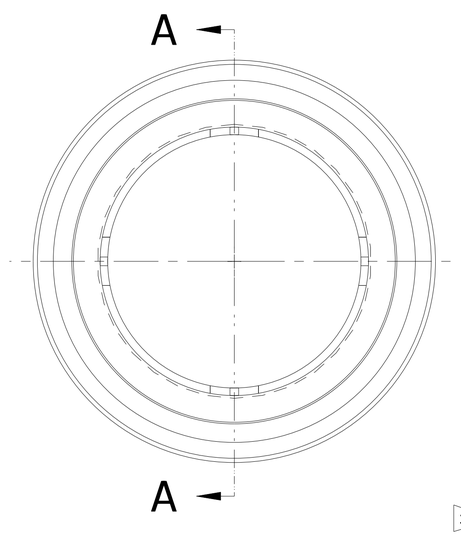

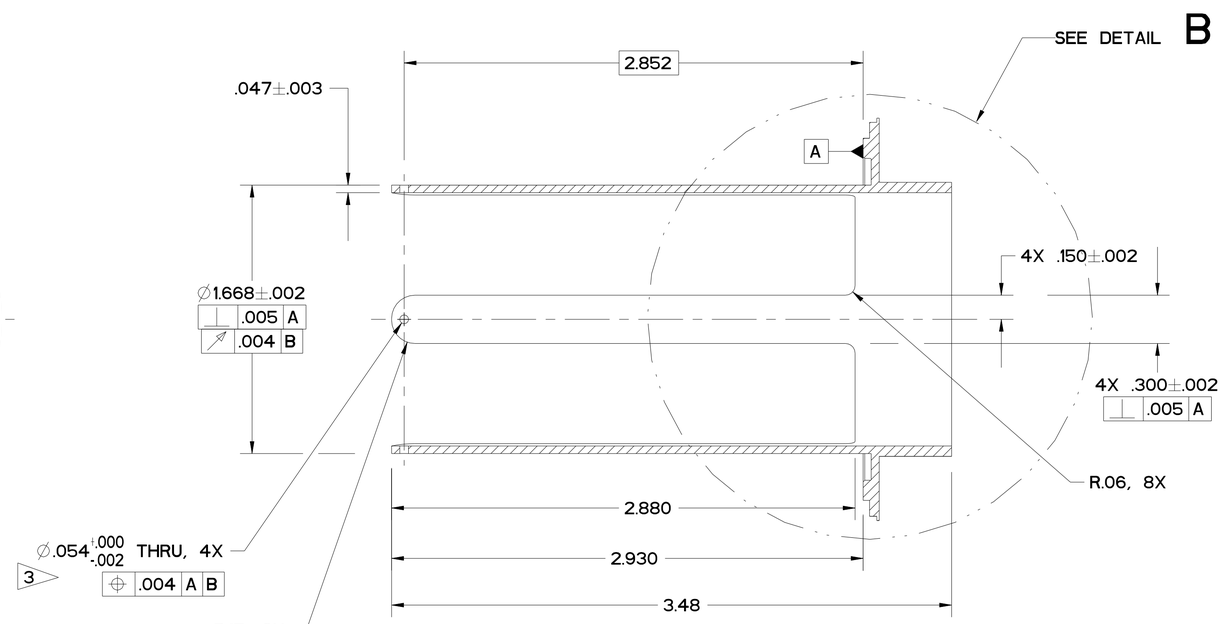

SECTION A-A

NOTES

1. STRESS RELIEVE PART PRIOR TO FINISH TURNING PROCESSES.
2. DIMENSIONING & TOLERANCING IS PER ANSI Y14.5M-1982. ALL DIMENSIONS ARE IN INCHES. REFERENCE DIMENSIONS ARE SHOWN IN PARETHESIS.
3. DEBURR ENTRANCE AND EXIT OF HOLE TO A SHARP EDGE (4X)
4. POSITIONAL TOLERANCES & DATUM FEATURES OF SIZE APPLY REGARDLESS OF FEATURE SIZE (RFS)
5. SEE 25B178 FOR CLEANING AND HANDLING PROCEDURES.

REV	DWG	CHK	ZONE	DATE	CHANGES
E	AZ		C8	3/4/01	ADDED DIMENSION ∅2.25
D	AZ			5/30/00	UPDATE BORDER FORMAT
D	AZ		A4	5/30/00	CHANGE RADIUS ON TINE ROUND
D	AZ		A3	5/30/00	CHANGED TINE LENGTH
C			A8	2/14/00	ADDED NOTE 2.
C			D7	2/14/00	ADDED MISSING DIMENSION
B				1/27/00	GENERAL CHANGES FOR IMPROVED MANUFACTURABILITY

UNLESS OTHERWISE SPECIFIED
PROJECTION:
TOLERANCES: X.X ± 0.0 | FRAC. ± 1/64 | X.XX ± 0.01 | Angles ± 0.5° | X.XXX ± 0.005 | FINISH 125
DO NOT SCALE PRINT
THREADS ARE CLASS 2
CHAMFER ENDS OF ALL SCREW TREADS 30°
CUT ROUND, 15 THREAD RELIEF ON MACHINED THREADS
BREAK EDGES .016 MAX. ON MACHINED WORK
REMOVE BURRS, WELD SPLATTER & LOOSE SCALE
IN ACCORDANCE WITH ASME Y14.5M & B461

DESCRIPTION	MATERIAL	MAT. LOCATION
	316 STAINLESS STEEL	-

SHOP ORDERS
ACCT NO. - | NO. REQD - | SER NO. - | DATE ISSD - | DEL TO - | DATE REQD -
SURFACE TREATMT ELECTROPOLISH
IDENT METHOD TAG
PROJECT NUMBER
PROJECT NAME SPALLATION NEUTRON SOURCE
DWG BY TREVOR GOULDING DATE 11-Jan-00
CHK BY DARYL OSHATZ DATE 12-Jan-00
APR BY DARYL OSHATZ DATE 12-Jan-00

ERNEST ORLANDO LAWRENCE
BERKELEY NATIONAL LABORATORY
UNIVERSITY OF CALIFORNIA - BERKELEY

SNS-FES MEBT
MECHANICAL SUBSYSTEMS
40 MM BPM ELECTRODE SPOOL

MICROFILMED: | PATENT CLEAR:
DWG. TYPE PART | SHOWN ON 25B184 | SCALE: 2/1 | DO NOT SCALE PRINTS
SHEET 1 OF 1
DESIGN ACCT. NO. | CATEGORY CODE FE3313 | DWG. NO. 25B1804 | SIZE | REV. E

Dwg. File: 25B180 Model File: 25B180