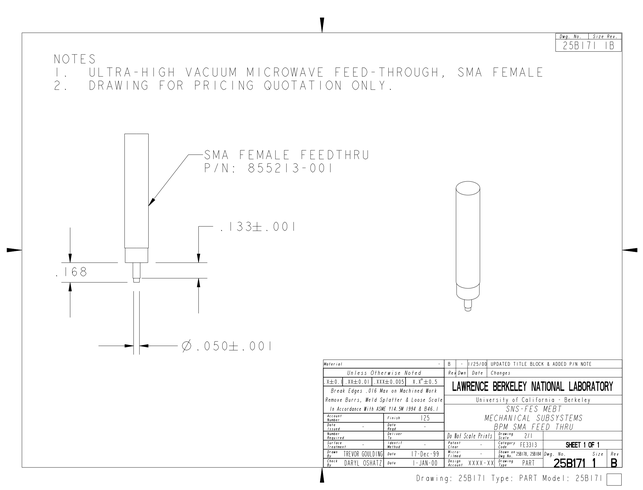
Dwg. No. | Size Rev.
25B171 1B
NOTES
1. ULTRA-HIGH VACUUM MICROWAVE FEED-THROUGH, SMA FEMALE
2. DRAWING FOR PRICING QUOTATION ONLY.
SMA FEMALE FEEDTHRU
P/N: 855213-001
.133±.001
.168
Ø.050±.001
Material
Unless Otherwise Noted
Break Edges .016 Max on Machined Work
Remove Burrs, Weld Splatter & Loose Scale
In Accordance With ASME Y14.5M-1994 & Bdd. 1
Finish 125
Do Not Scale Prints
Drawn By TREVOR GOULDING
Date 17-Dec-99
Check By DARYL OSHATZ
Date 1-JAN-00
B 1/25/00 UPDATED TITLE BLOCK & ADDED P/N NOTE
Rev Date Changes
LAWRENCE BERKELEY NATIONAL LABORATORY
University of California - Berkeley
SNS-FES MEBT
MECHANICAL SUBSYSTEMS
BPM SMA FEED THRU
Drawing Size 211
Drawing Number FE3313
Drawing Type PART
SHEET 1 OF 1
Dwg. No. 25B171
Size 1
Rev B
Drawing: 25B171 Type: PART Model: 25B171