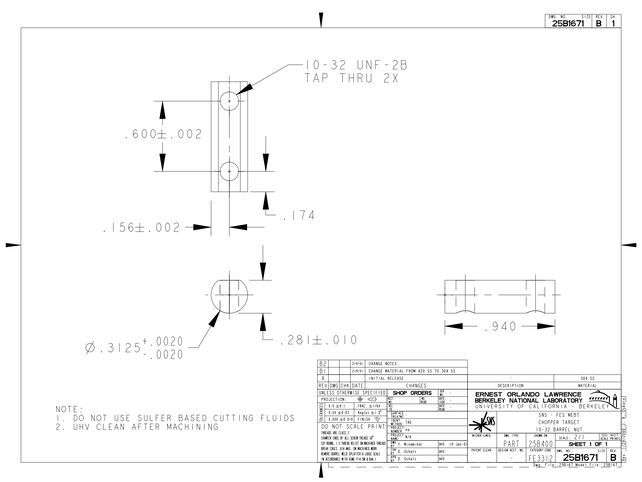

10-32 UNF-2B
TAP THRU 2X
.600±.002
.174
.156±.002
.281±.010
Ø.3125 +.0020 -.0020
.940
NOTE:
1. DO NOT USE SULFER BASED CUTTING FLUIDS
2. UHV CLEAN AFTER MACHINING
ERNEST ORLANDO LAWRENCE
BERKELEY NATIONAL LABORATORY
UNIVERSITY OF CALIFORNIA - BERKELEY
SNS - FED WEST
CHOPPER TARGET
10-32 BARREL NUT
SHOP ORDERS
DO NOT SCALE PRINT
SHEET 1 OF 1
25B1671
B