REQ	ITEM	PART NUMBER	DESCRIPTION
			#13 GAUGE SQUARE COPPER MAGNET WIRE, HEAVY
			BUILD INSULATION CONDUCTOR NOM DIM = .072"
			NOM OVERALL DIM = .078", MIN DIM = .0740"
			MAX DIM = .0781"

B1 A1

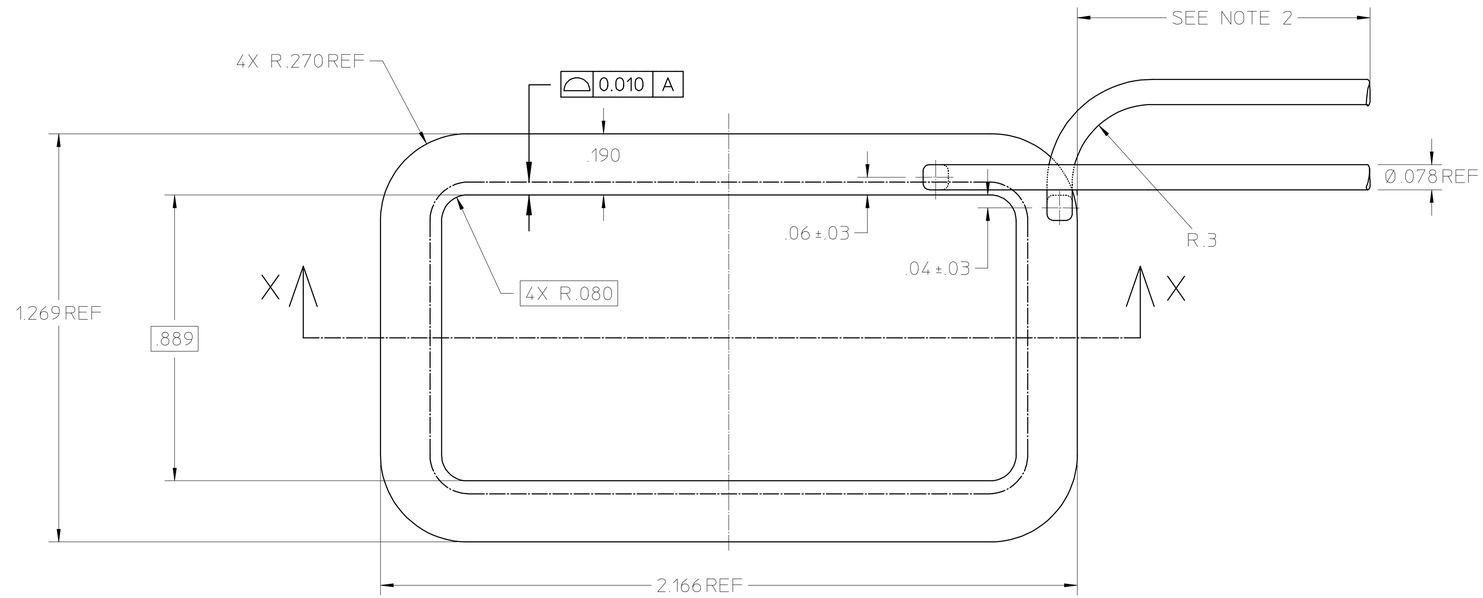

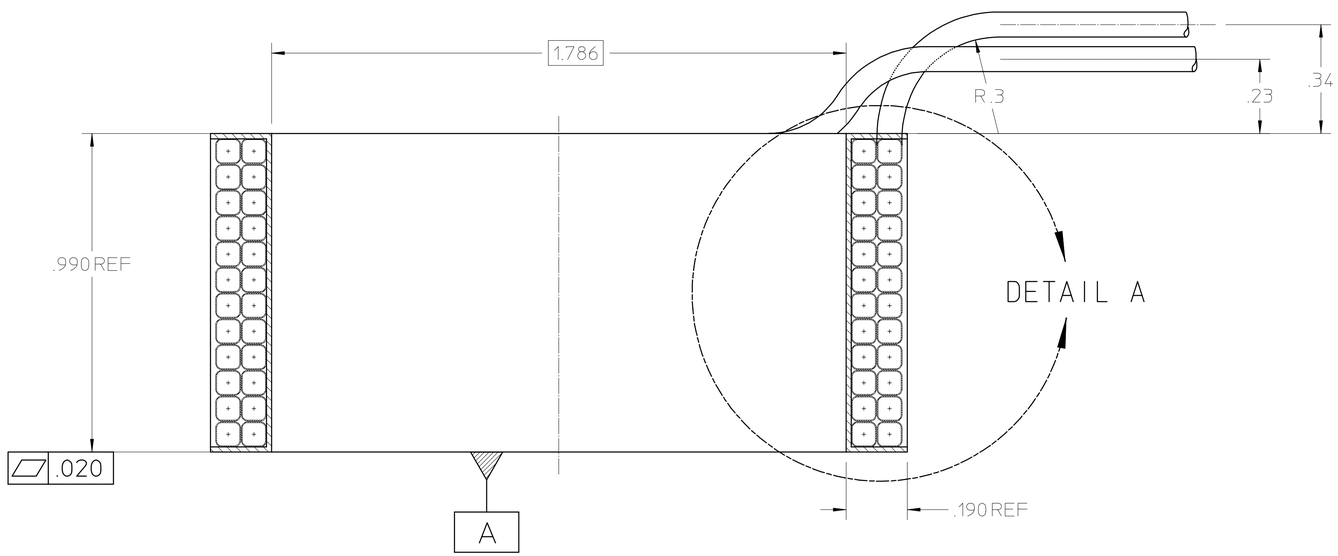

SECTION X-X

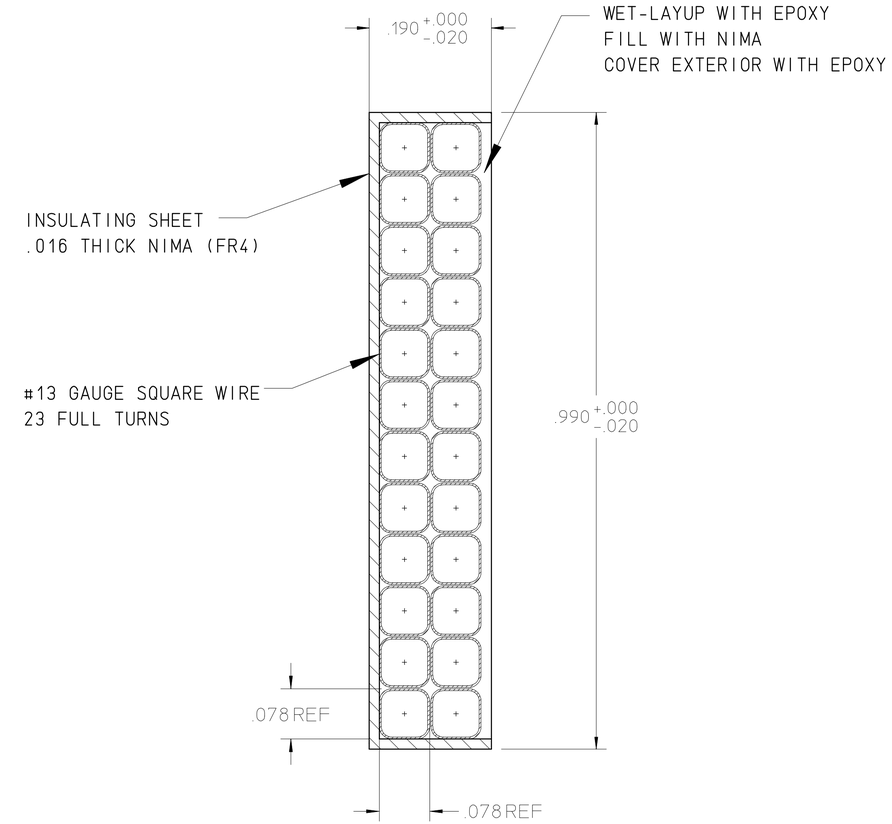

DETAIL A
X-SEC ENVELOPE
Scale: 8X

25B1464B

NOTES: 1. ALL DIMENSIONS ARE INCHES.
2. LEAVE ATLEAST 2 FEET OF WIRE FOR BOTH LEADS.

REV	DWG	CHK	ZONE	DATE	CHANGES
B1	YM		D3	3-3-00	WAS #19 GAUGE WIRE.
A1	YM		D3	2-1-00	WAS #17 GAUGE WIRE.

UNLESS OTHERWISE SPECIFIED
TOLERANCES: .X ± – ; FRAC. ±1/64 ; .XX ± .02 ; ANGLES ±1° ; .XXX ± .005 ; FINISH 125√
THREADS ARE CLASS 2
CHAMFER ENDS OF ALL SCREW THREADS 30°.
CUT 1.5 PITCH THRD RELIEF WITH ROUND NOSE TOOL ON MACHINE CUT THREADS.
BREAK EDGES .016 MAX. ON MACHINED WORK
REMOVE BURRS WELD SPLATTER & LOOSE SCALE
REFERENCES: ANSI Y14.5 & B46.1.

SHOP ORDERS
ACCT NO. | SERIAL NO.
DATE ISSD | DATE REQD. | NO. REQD.
DELIVER TO
SURFACE TREATMENT: DEGREASE
IDENT. METH.: TAG
DWG. BY: Y. MINAMIHARA | DATE: 12-15-99
CHK. BY | DATE

LAWRENCE BERKELEY LABORATORY
UNIVERSITY OF CALIFORNIA-BERKELEY
SNS - FES MEBT
MECHANICAL BEAM TRANSPORT SYSTEMS - QUADS
VERTICAL STEERING COIL

PATENT CLEAR	DWG. TYPE	SHOWN ON	SCALE 4X	DO NOT SCALE PRINTS
	DETAIL			
MICROFILMED	DESIGN ACCT NO.	CATEGORY CODE FE3312	DWG. NO. 25B1464	SIZE / REV. B