| REQ | ITEM | PART NUMBER | DESCRIPTION |
|---|---|---|---|
| | | | OFE COPPER, .375 THICK PLATE |
| | | | |
| | | | |

A1

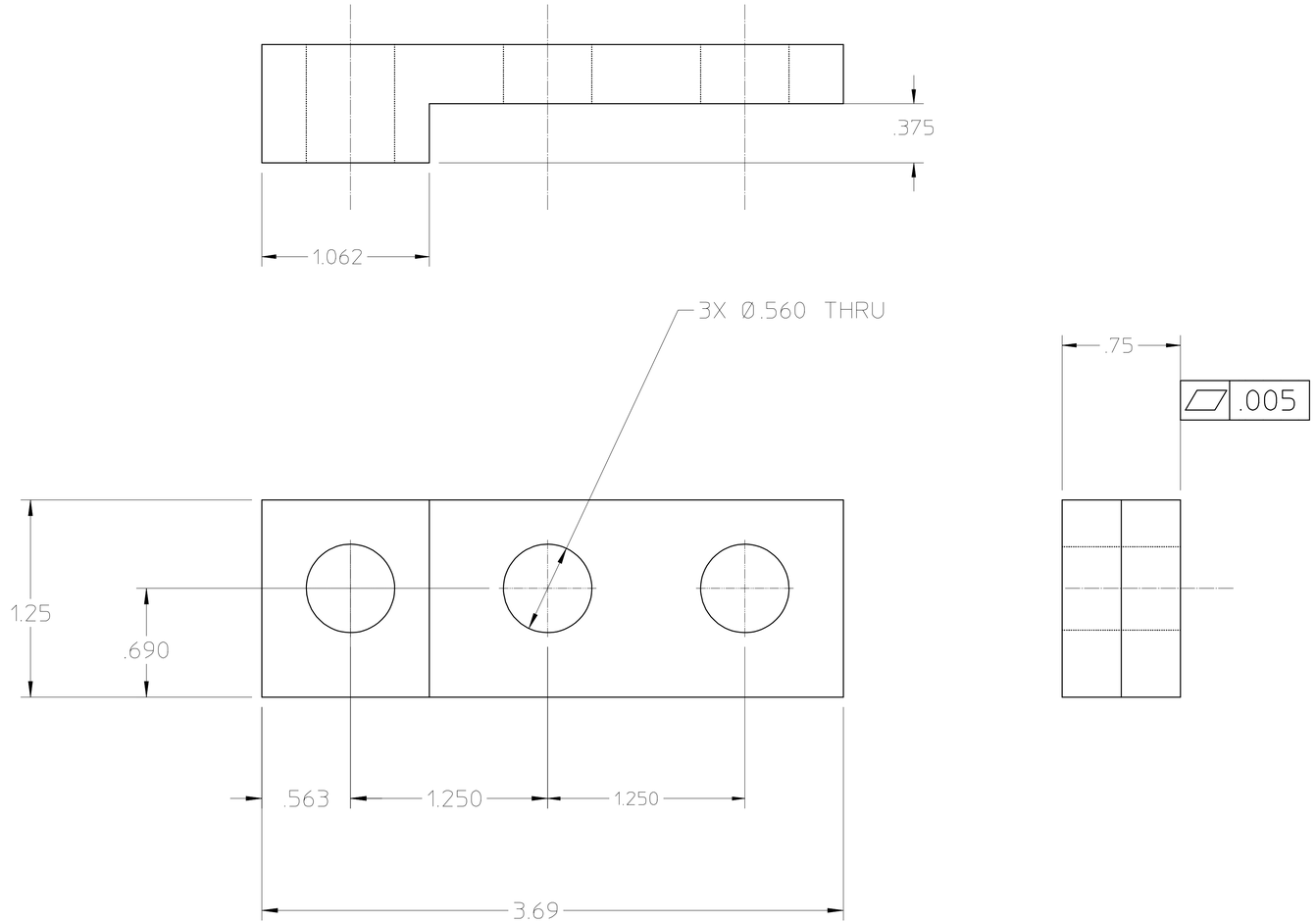


25B1434A

NOTES: 1. ALL DIMENSIONS ARE IN INCHES.

2. ELECTROPLATE 'FLASH GOLD' ALL SURFACES .00001 THICK.

| REV | DWG | CHK | ZONE | DATE | CHANGES |
|---|---|---|---|---|---|
| A1 | YM | | | 5-12-00 | WAS .375 THICK. |

UNLESS OTHERWISE SPECIFIED

TOLERANCES: .X ± – ; FRAC. ± 1/64 ; .XX ± .02 ; ANGLES ± 1° ; .XXX ± .005 ; FINISH 125√

THREADS ARE CLASS 2
CHAMFER ENDS OF ALL SCREW THREADS 30°.
CUT 1.5 PITCH THRD RELIEF WITH ROUND NOSE TOOL ON MACHINE CUT THREADS.
BREAK EDGES .016 MAX. ON MACHINED WORK
REMOVE BURRS WELD SPLATTER & LOOSE SCALE
REFERENCES: ANSI Y14.5 & B46.1.

SHOP ORDERS

ACCT NO. | SERIAL NO.
DATE ISSD. | DATE REQD. | NO. REQD.
DELIVER TO
SURFACE TREATMENT: DEGREASE
IDENT. METH.: TAG
DWG. BY: Y. MINAMIHARA | DATE: 12-15-99
CHK. BY | DATE

**LAWRENCE BERKELEY LABORATORY**
UNIVERSITY OF CALIFORNIA-BERKELEY

SNS - FES MEBT
MECHANICAL BEAM TRANSPORT SYSTEMS - QUADS
STRAIGHT BUS-BAR

| PATENT CLEAR | DWG. TYPE | SHOWN ON | SCALE | DO NOT SCALE PRINTS |
|---|---|---|---|---|
| | DETAIL | | 4X | |
| MICROFILMED | DESIGN ACCT NO. | CATEGORY CODE | DWG. NO. | SIZE / REV. |
| | 8210-23 | FE3312 | 25B1434 | A |