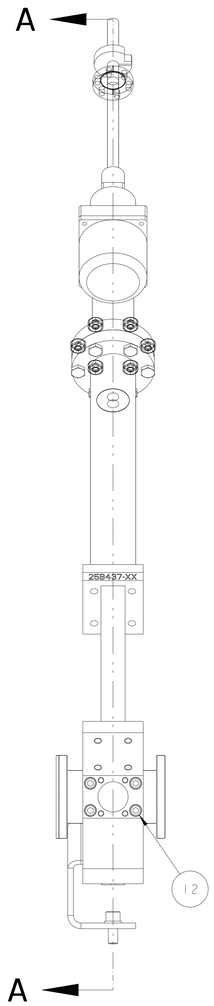

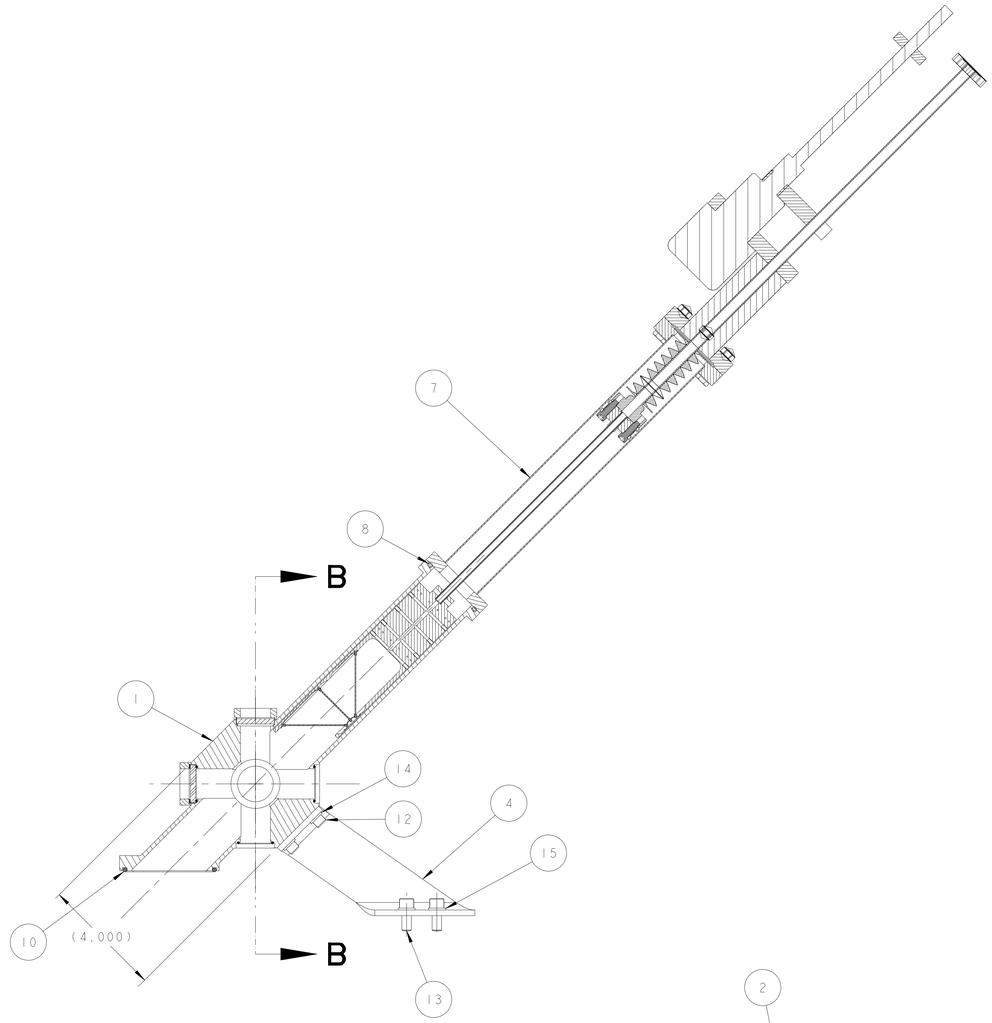

SECTION A-A

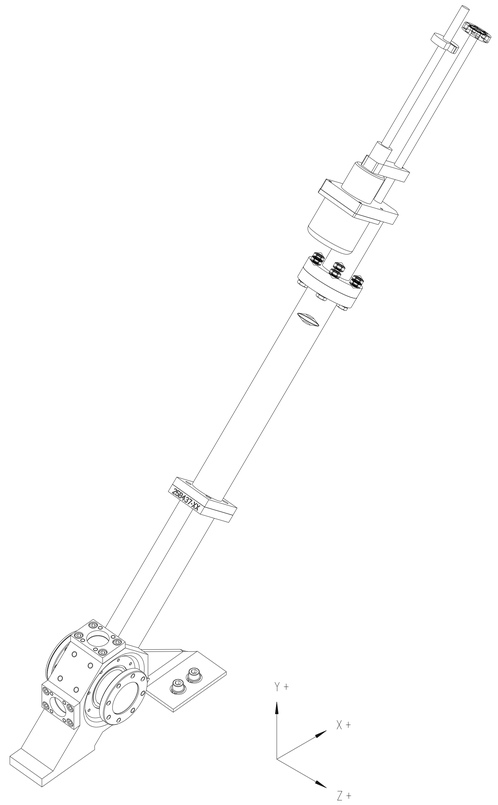

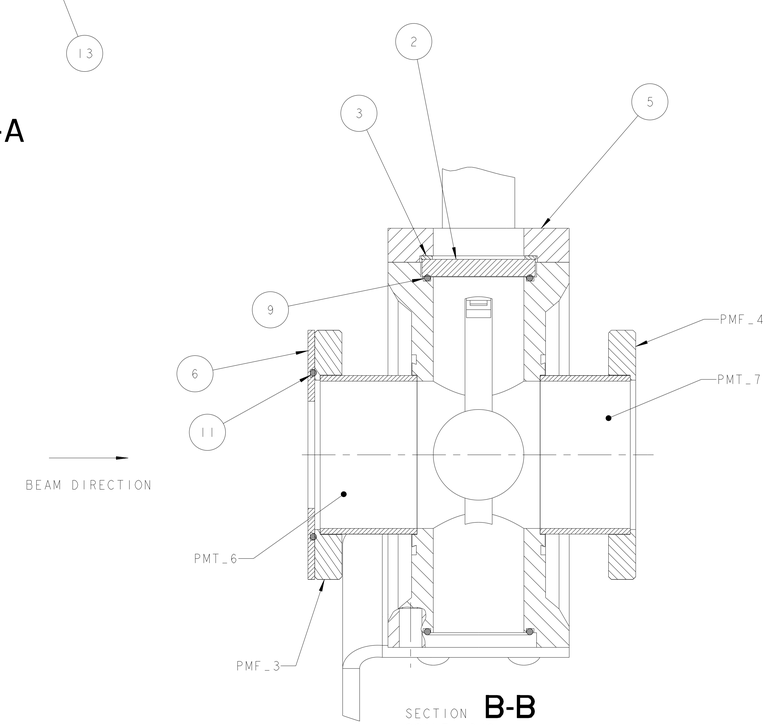

SECTION B-B
SCALE 3/2

ITEM	PART NO.	REQD	DESCRIPTION	MATERIAL
15	98017A690	2	5/16" FLAT WASHER AN 960 , MCMASTER-CARR OR EQUIV	-
14	98017A660	4	1/4" DIA FLAT WASHER AN 960 , MCMASTER-CARR OR EQUIV	18-8 SS
13		2	5/16-18 x .75 SHC SCREW	
12		12	1/4-28 UNF, .500 LG SOC HD SCREW	18-8 SS
11	-	1	O-RING, PARKER # 2-031	VITON A
10		1	O-RING, PARKER # 2-226	VITON A
9	-	4	O-RING, PARKER # 2-023	VITON A
8		1	O-RING, PARKER # 2-221	VITON A
7	BNL 5706001	1	WIRE SCANNER ASSEMBLY (BNL)	-
6	25B695	1	30 MM BPM ADAPTER FLANGE	304 STAINLESS STEEL
5	25B445	2	PM WINDOW FLANGE	304 SS
4	25B119	1	PM SUPPORT BRACKET	304 SS
3	25B113	2	PM WINDOW SPACER	NEOPRENE
2	25B112	2	PM WINDOW	PYREX GLASS
1	25B116	1	PM5 BEAMBOX WELDMENT	-

REV	DWG	CHK	ZONE	DATE	CHANGES
B	PAL	DPO		11/21/01	REFORMATTED B/M & DRAWING
A	AZ	DPO		6/7/01	INITIAL RELEASE

UNLESS OTHERWISE SPECIFIED
PROJECTION:
TOLERANCES: X.X ± 0.1 FRAC. ± 1/64; X.XX ± 0.01 Angles ± 0.1°; X.XXX ± 0.005 FINISH 125
DO NOT SCALE PRINT
THREADS ARE CLASS 2
CHAMFER ENDS OF ALL SCREW THREADS 30°
CUT ROUND, 1.5 THREAD RELIEF ON MACHINED THREADS
BREAK EDGES .016 MAX. ON MACHINED WORK
REMOVE BURRS, WELD SPLATTER & LOOSE SCALE
IN ACCORDANCE WITH ASME Y14.5M & B46.1

SHOP ORDERS
ACCT NO. / NO. REQD / DATE
BILL OF MATERIALS / DATE
SURFACE TREATMT.
IDENT METHOD TAG
PROJECT NUMBER no
PROJECT NAME N/A
DWG BY Andrew Zachoszcz DATE 10-Oct-01
CHK BY Daryl Oshatz DATE
APR BY Daryl Oshatz DATE

ERNEST ORLANDO LAWRENCE BERKELEY NATIONAL LABORATORY
UNIVERSITY OF CALIFORNIA - BERKELEY

SNS - FES MEBT
PROFILE MONITOR
PM5 BEAMBOX ASSEMBLY

MICROFILMED: | DWG. TYPE ASSEM | SHOWN ON - | SCALE: 1/2 | DO NOT SCALE PRINT
SHEET 1 OF 1
PATENT CLEAR: | DESIGN ACCT. NO. - | CATEGORY CODE FE3313 | DWG. NO. 25B1156 | SIZE | REV. B

DWG. NO. 25B1156 REV B