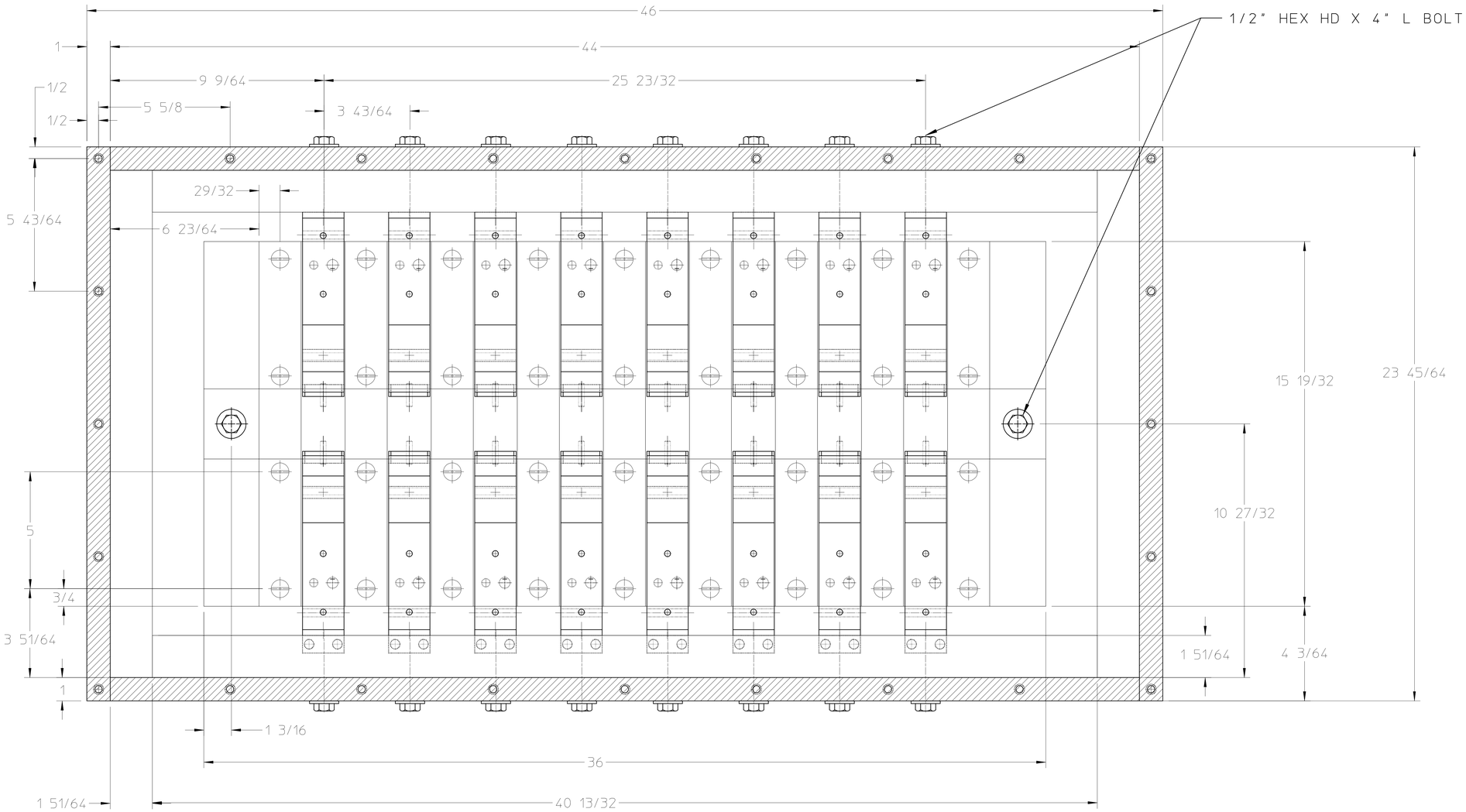

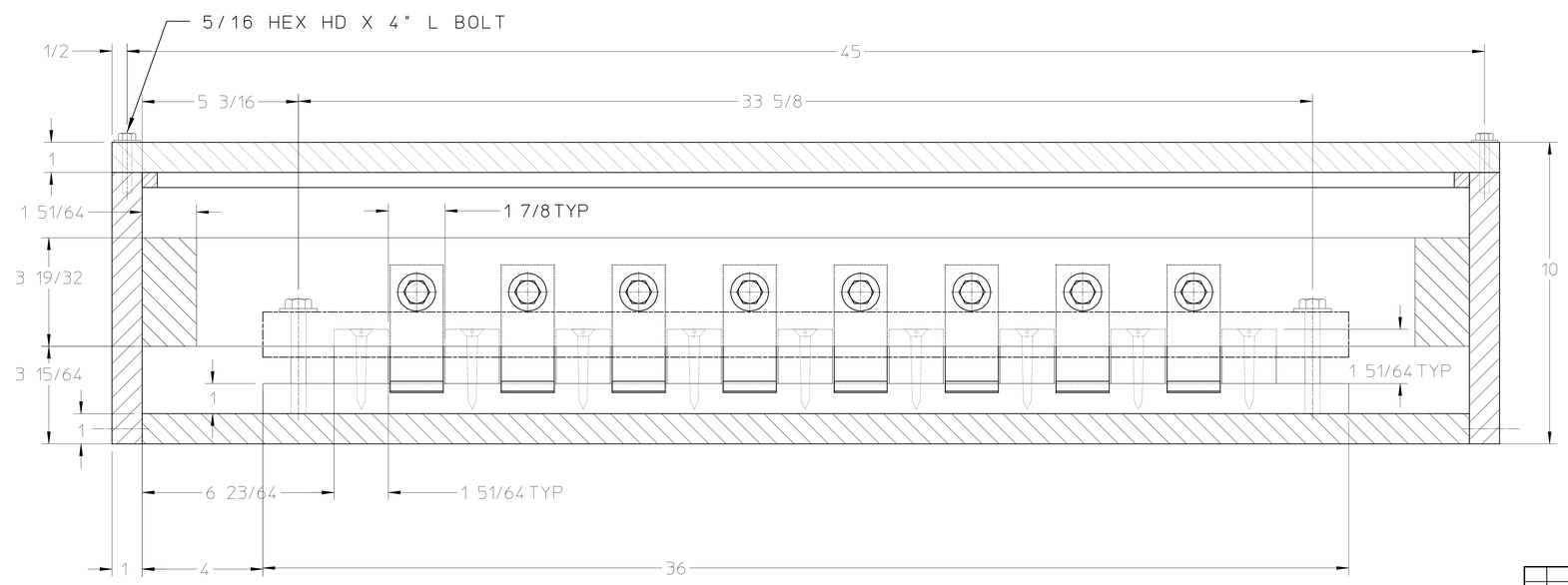

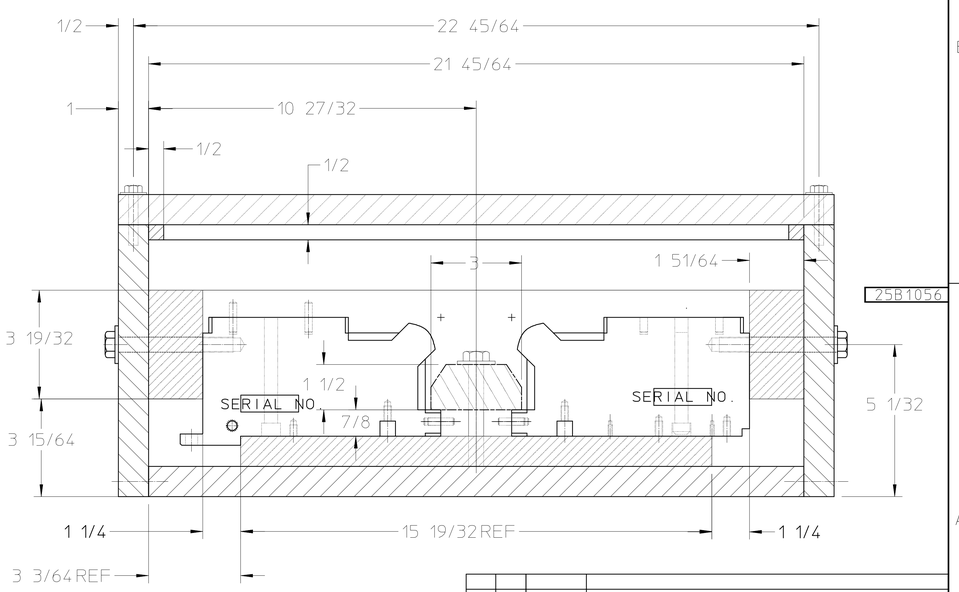

25B1056

REQD	ITEM	PART NO.	DESCRIPTION

REV	DWG	CHK	ZONE	DATE	CHANGES

UNLESS OTHERWISE SPECIFIED
TOLERANCES: X ± .1 FRAC. ± 1/64; XX ± .01 ANGLES ± 1°; XXX ± .001 FINISH 125√
THREADS ARE CLASS 2
CHAMFER ENDS OF ALL SCREW THREADS 30°
CUT 1.5 PITCH THRD RELIEF WITH ROUND NOSE TOOL ON MACHINE CUT THREADS.
BREAK EDGES .016 MAX ON MACHINED WORK
REMOVE BURRS WELD SPLATTER & LOOSE SCALE
REFERENCES: ANSI Y14.5 & B46.1.

SHOP ORDERS
ACCT. NO. | SERIAL NO.
DATE ISSD | DATE REQD | NO. REQD
DELIVER TO
SURFACE TREATMENT
IDENT. METH.
DWG BY: Y. MINAMIHARA DATE: 11-14-00
CHK BY: DATE

LAWRENCE BERKELEY LABORATORY
UNIVERSITY OF CALIFORNIA-BERKELEY

SNS - FE MEBT
QUADRUPOLE MAGNET
PLATING SHIPMENT BOX

PATENT CLEAR	DWG. TYPE	SHOWN ON	SCALE	DO NOT SCALE PRINTS
	ASSEMBLY		HALF	
MICROFILMED	DESIGN ACCT. NO.	CATEGORY CODE	DWG. NO	SIZE / REV
		FE3312	25B1056	