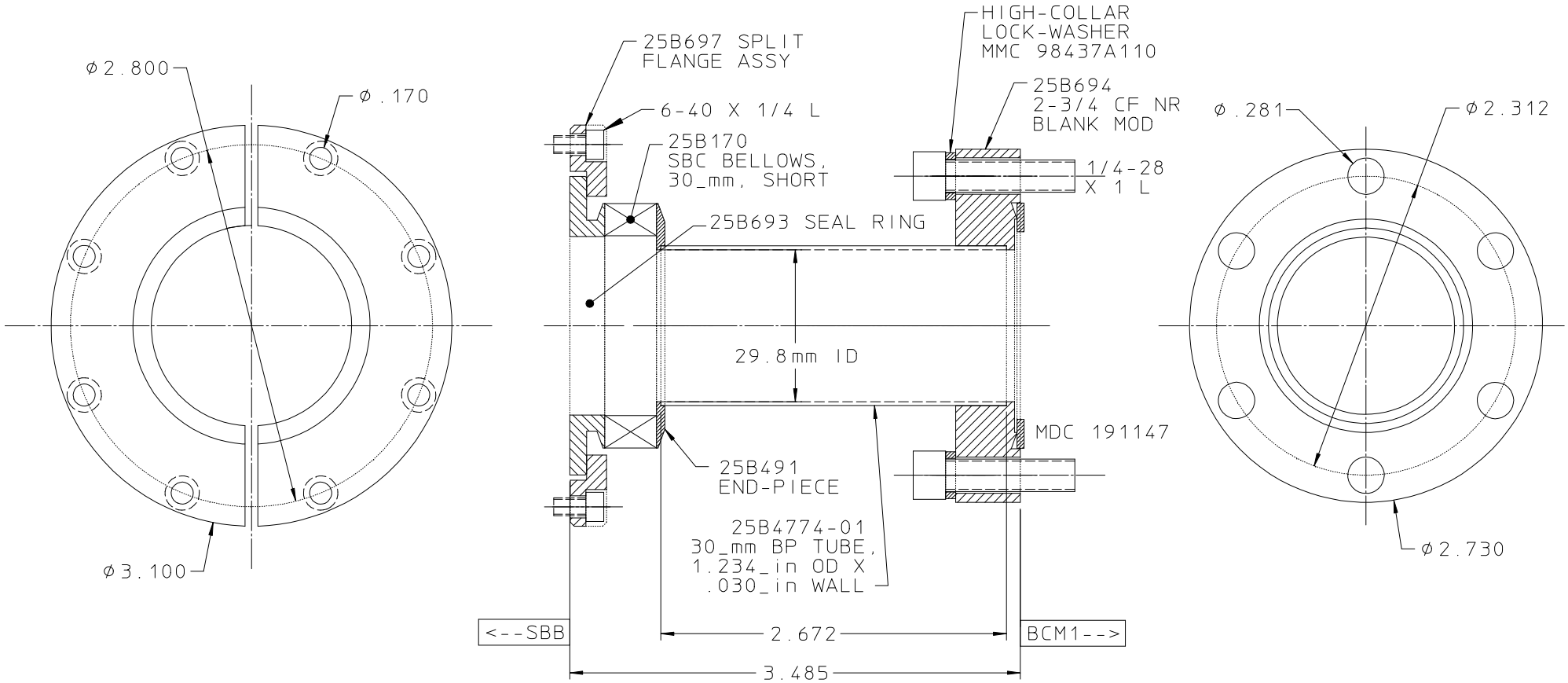
ϕ2.800
ϕ.170
ϕ3.100
25B697 SPLIT
FLANGE ASSY
6-40 X 1/4 L
25B170
SBC BELLOWS,
30_mm, SHORT
25B693 SEAL RING
HIGH-COLLAR
LOCK-WASHER
MMC 98437A110
25B694
2-3/4 CF NR
BLANK MOD
1/4-28
X 1 L
29.8mm ID
MDC 191147
25B491
END-PIECE
25B4774-01
30_mm BP TUBE,
1.234_in OD X
.030_in WALL
<--SBB
2.672
BCM1-->
3.485
ϕ.281
ϕ2.312
ϕ2.730

BP 1

BEAM-->

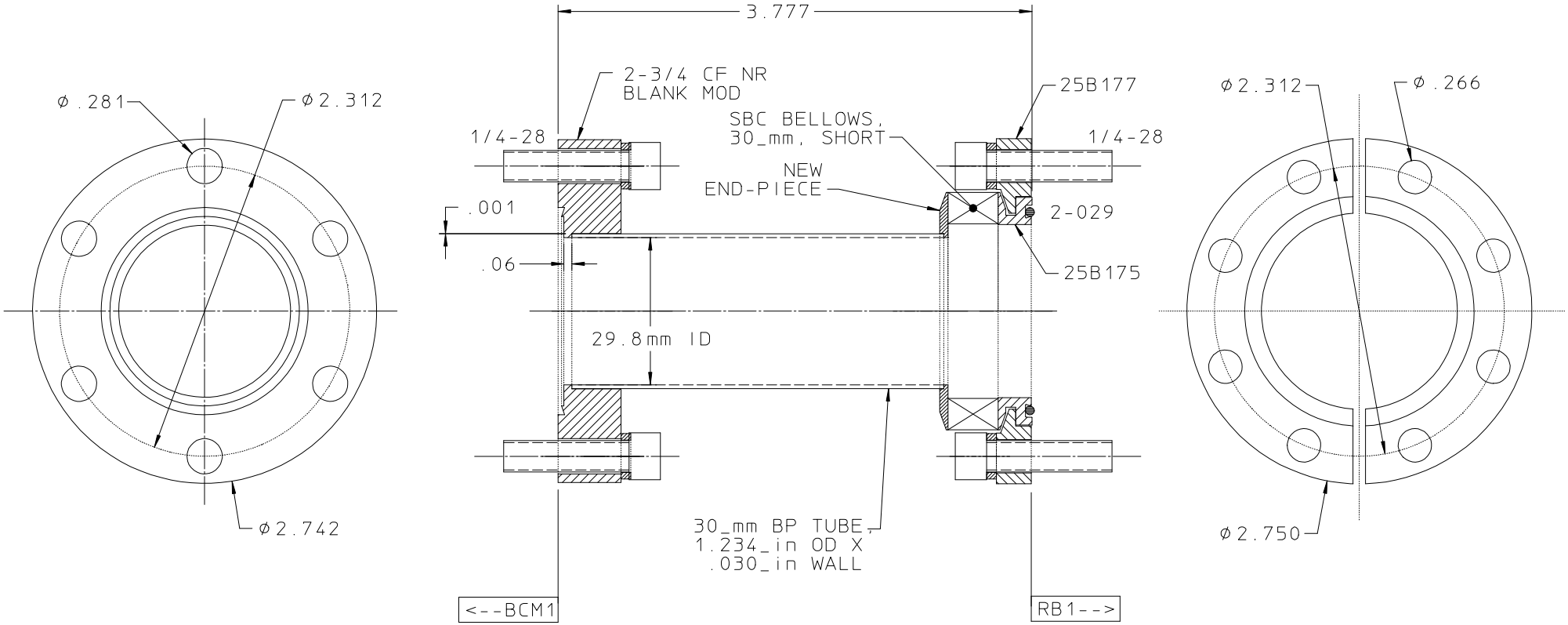
3.777
2-3/4 CF NR
BLANK MOD
25B177
SBC BELLOWS,
30_mm, SHORT
1/4-28
1/4-28
NEW
END-PIECE
.001
2-029
.06
25B175
29.8mm ID
Ø.281
Ø2.312
Ø2.742
30_mm BP TUBE,
1.234_in OD X
.030_in WALL
<--BCM1
RB1-->
Ø2.312
Ø.266
Ø2.750

BP 2

BEAM-->

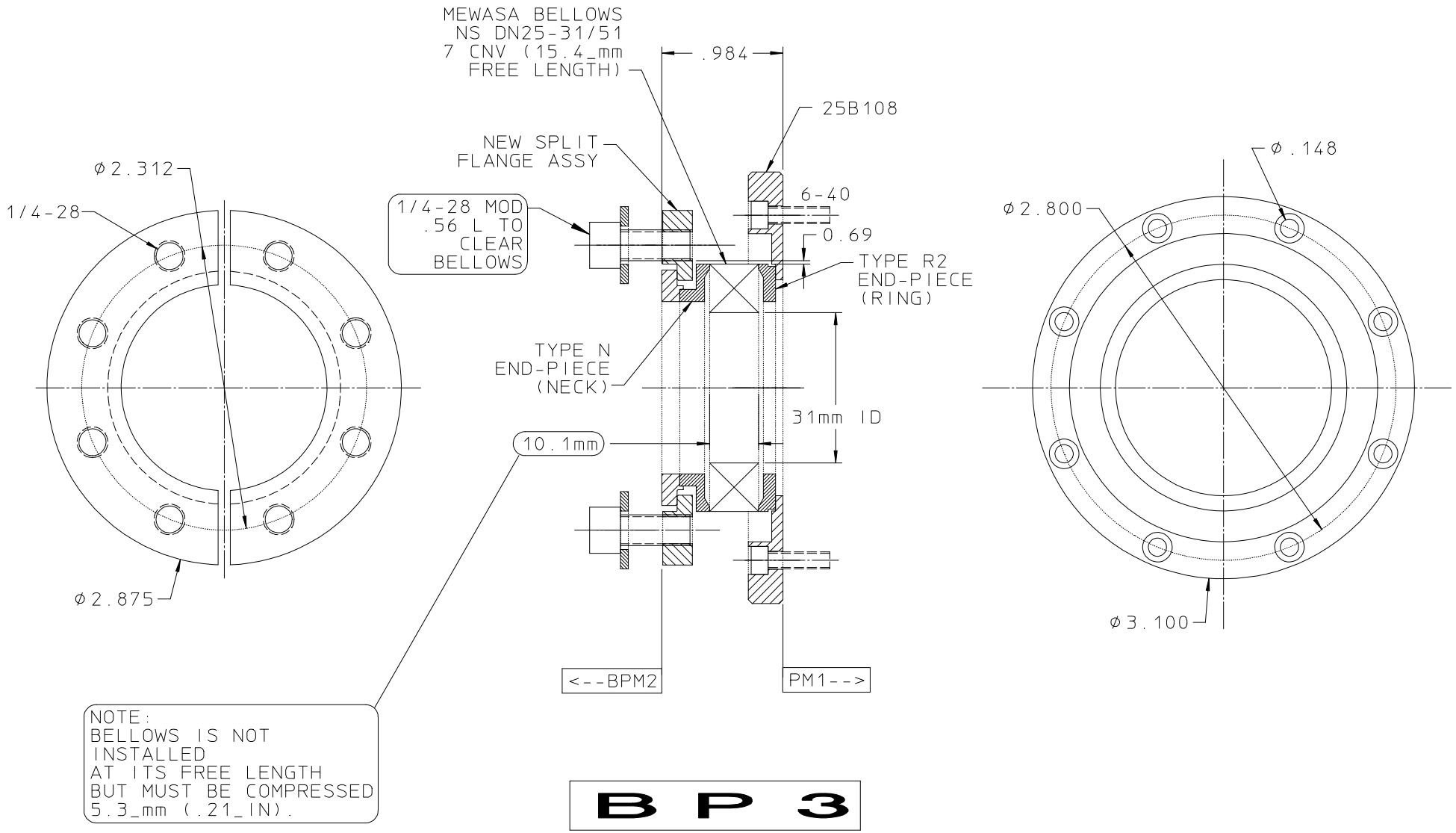
MEWASA BELLOWS
NS DN25-31/51
7 CNV (15.4_mm
FREE LENGTH)
.984
25B108
NEW SPLIT
FLANGE ASSY
Ø2.312
1/4-28
1/4-28 MOD
.56 L TO
CLEAR
BELLOWS
6-40
0.69
TYPE R2
END-PIECE
(RING)
TYPE N
END-PIECE
(NECK)
31mm ID
10.1mm
Ø2.875
<--BPM2
PM1-->
Ø.148
Ø2.800
Ø3.100
NOTE:
BELLOWS IS NOT
INSTALLED
AT ITS FREE LENGTH
BUT MUST BE COMPRESSED
5.3_mm (.21_IN).
BP 3
BEAM-->

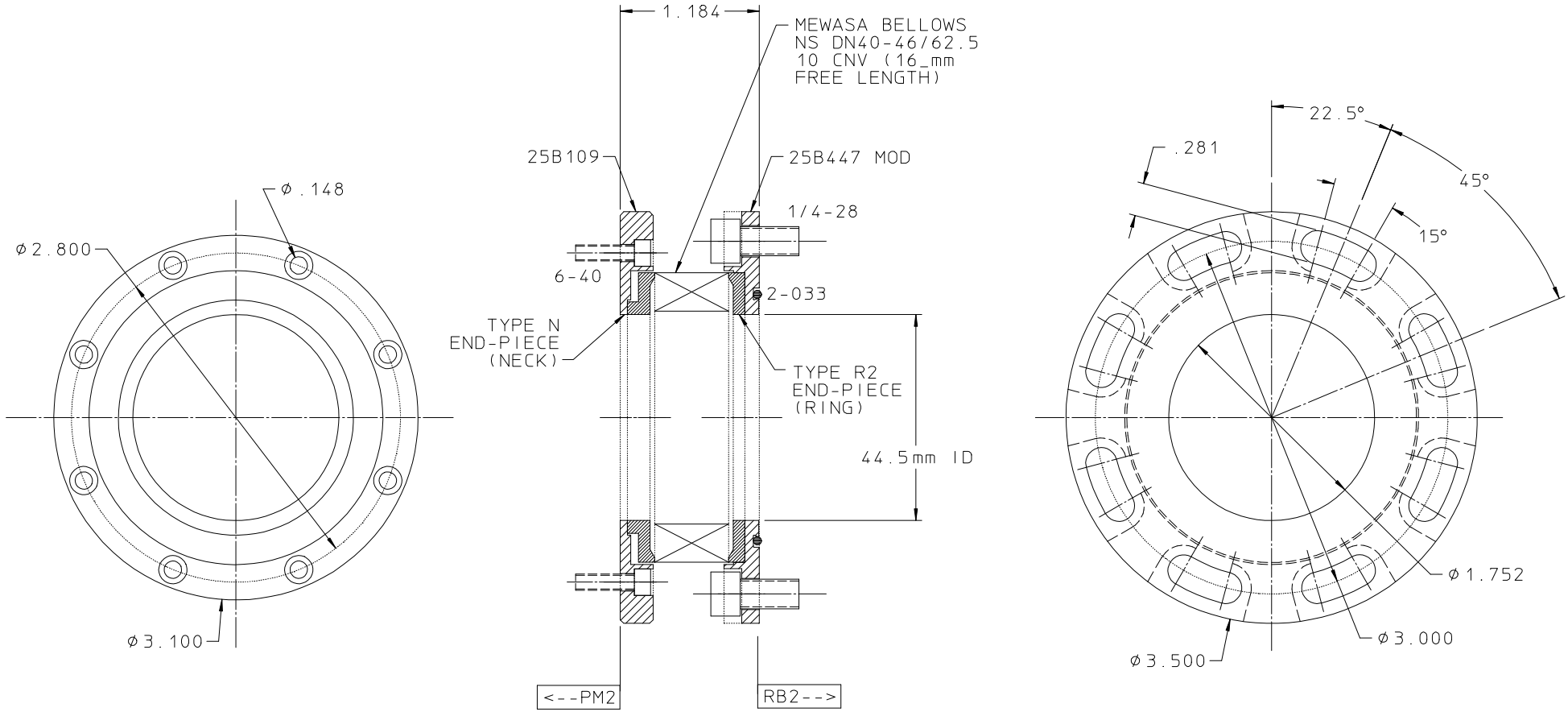
1.184
MEWASA BELLOWS
NS DN40-46/62.5
10 CNV (16_mm
FREE LENGTH)
25B109
25B447 MOD
1/4-28
6-40
2-033
TYPE N
END-PIECE
(NECK)
TYPE R2
END-PIECE
(RING)
44.5mm ID
<--PM2
RB2-->
ø.148
ø2.800
ø3.100
22.5°
.281
45°
15°
ø1.752
ø3.000
ø3.500

BP 4

BEAM-->

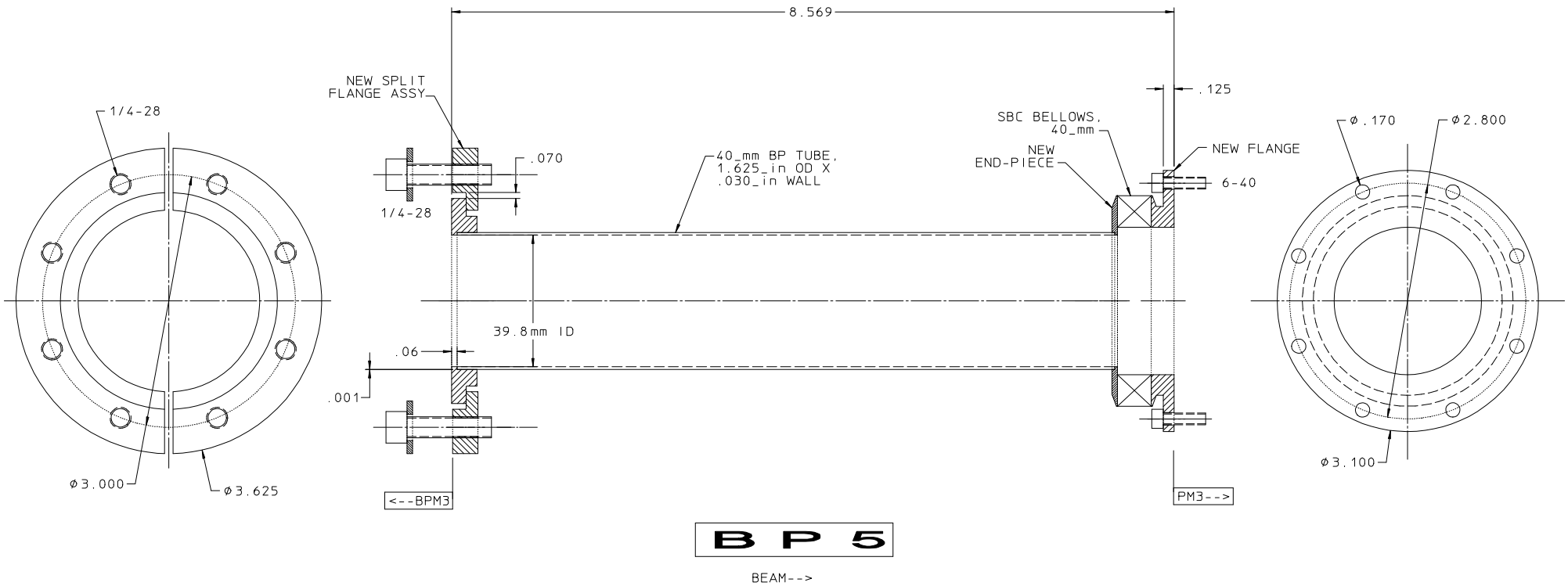
8.569
NEW SPLIT
FLANGE ASSY
1/4-28
.070
1/4-28
40_mm BP TUBE,
1.625_in OD X
.030_in WALL
.125
SBC BELLOWS,
40_mm
NEW
END-PIECE
NEW FLANGE
6-40
Ø.170
Ø2.800
39.8mm ID
.06
.001
Ø3.000
Ø3.625
Ø3.100
<--BPM3
PM3-->
BP 5
BEAM-->

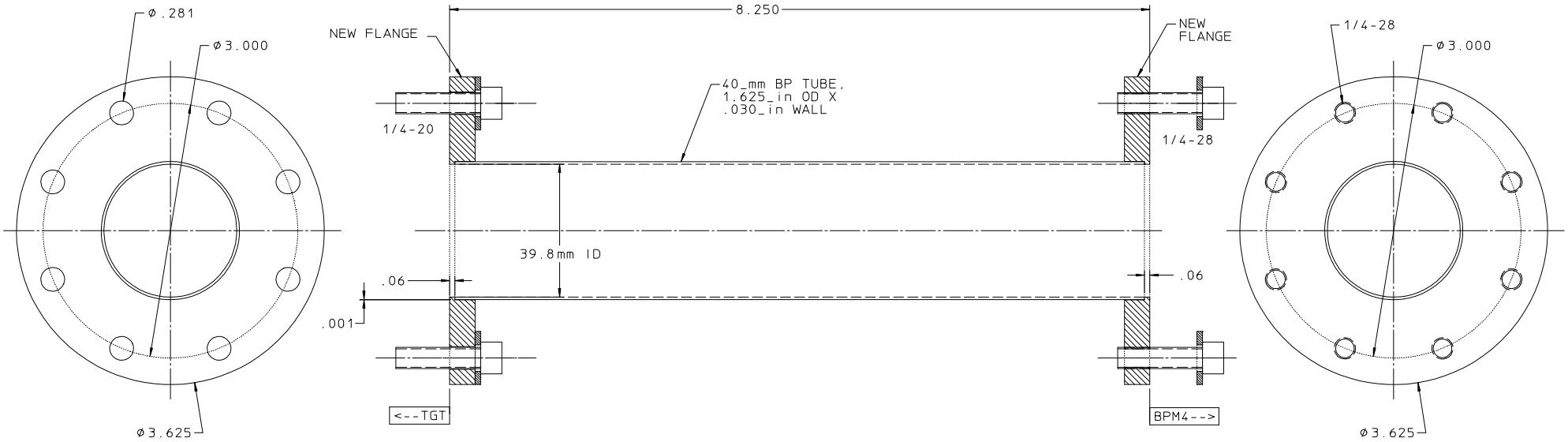
Ø.281
Ø3.000
Ø3.625
NEW FLANGE
8.250
NEW FLANGE
1/4-28
Ø3.000
40_mm BP TUBE,
1.625_in OD X
.030_in WALL
1/4-20
1/4-28
39.8mm ID
.06
.06
.001
<--TGT
BPM4-->
Ø3.625

BP 6

BEAM-->

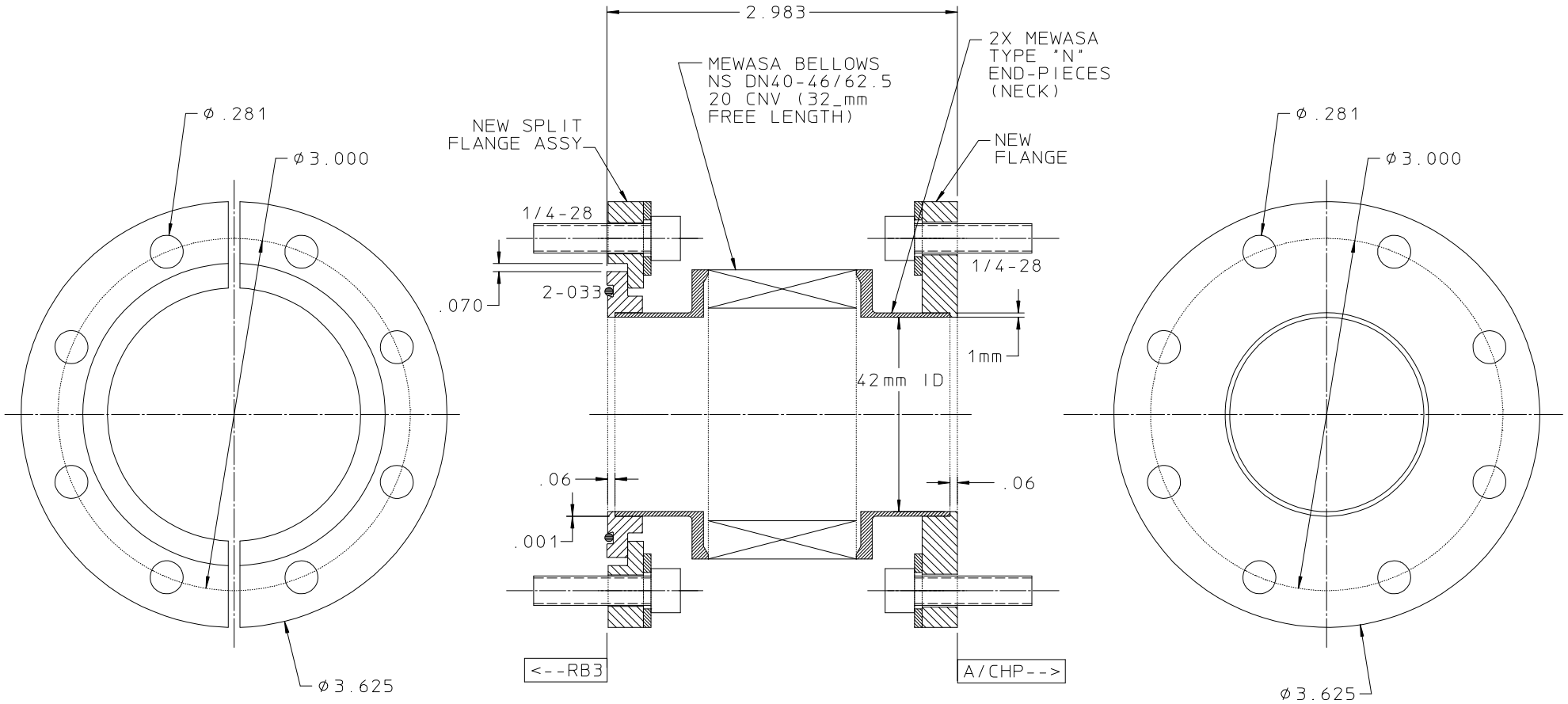
2.983
2X MEWASA
TYPE "N"
END-PIECES
(NECK)
MEWASA BELLOWS
NS DN40-46/62.5
20 CNV (32_mm
FREE LENGTH)
NEW SPLIT
FLANGE ASSY
NEW
FLANGE
Ø.281
Ø3.000
1/4-28
1/4-28
.070
2-033
1mm
42mm ID
.06
.06
.001
Ø3.625
<--RB3
A/CHP-->
Ø.281
Ø3.000
Ø3.625

BP 7

BEAM-->

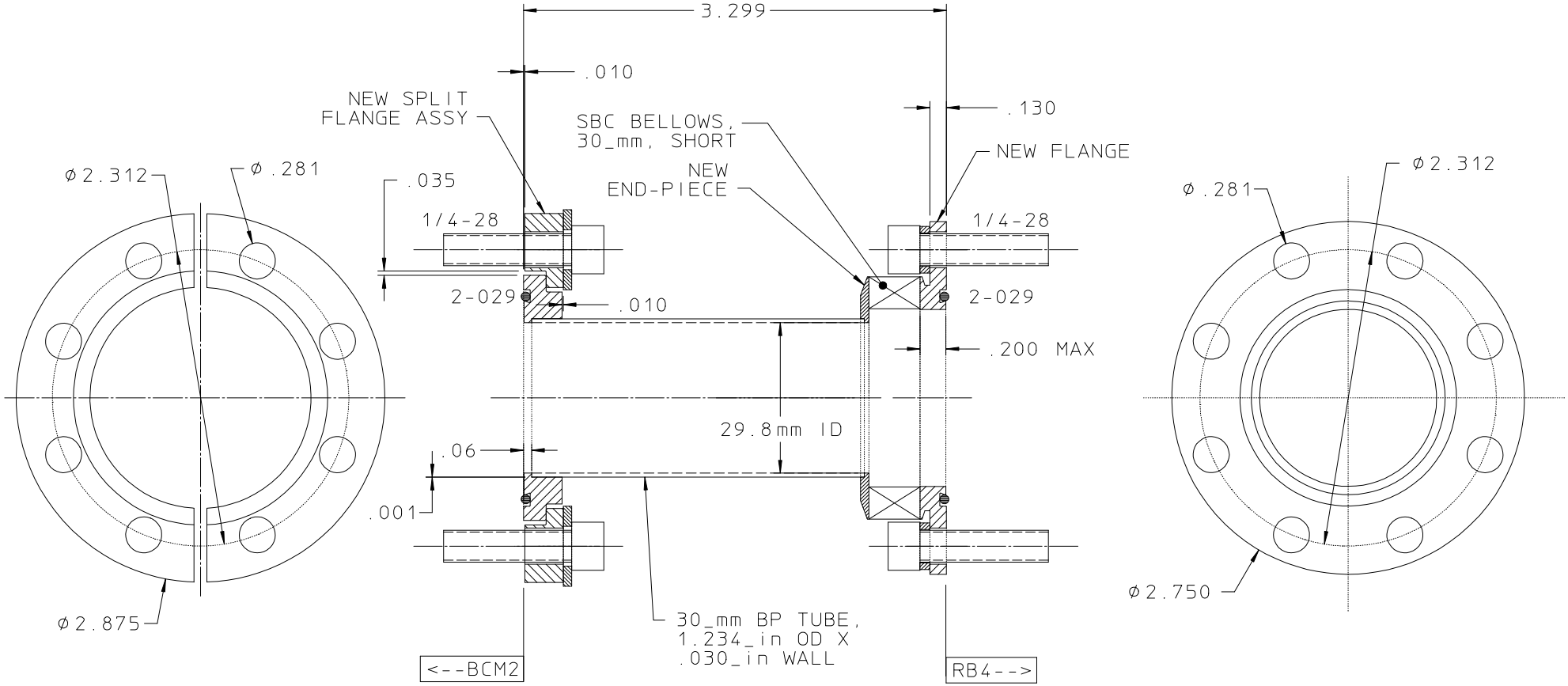
3.299
.010
.130
NEW SPLIT
FLANGE ASSY
SBC BELLOWS,
30_mm, SHORT
NEW FLANGE
NEW
END-PIECE
ϕ2.312
ϕ.281
.035
1/4-28
1/4-28
2-029
.010
2-029
.200 MAX
29.8mm ID
.06
.001
ϕ2.875
30_mm BP TUBE,
1.234_in OD X
.030_in WALL
<--BCM2
RB4-->
ϕ.281
ϕ2.312
ϕ2.750

BP 8

BEAM-->

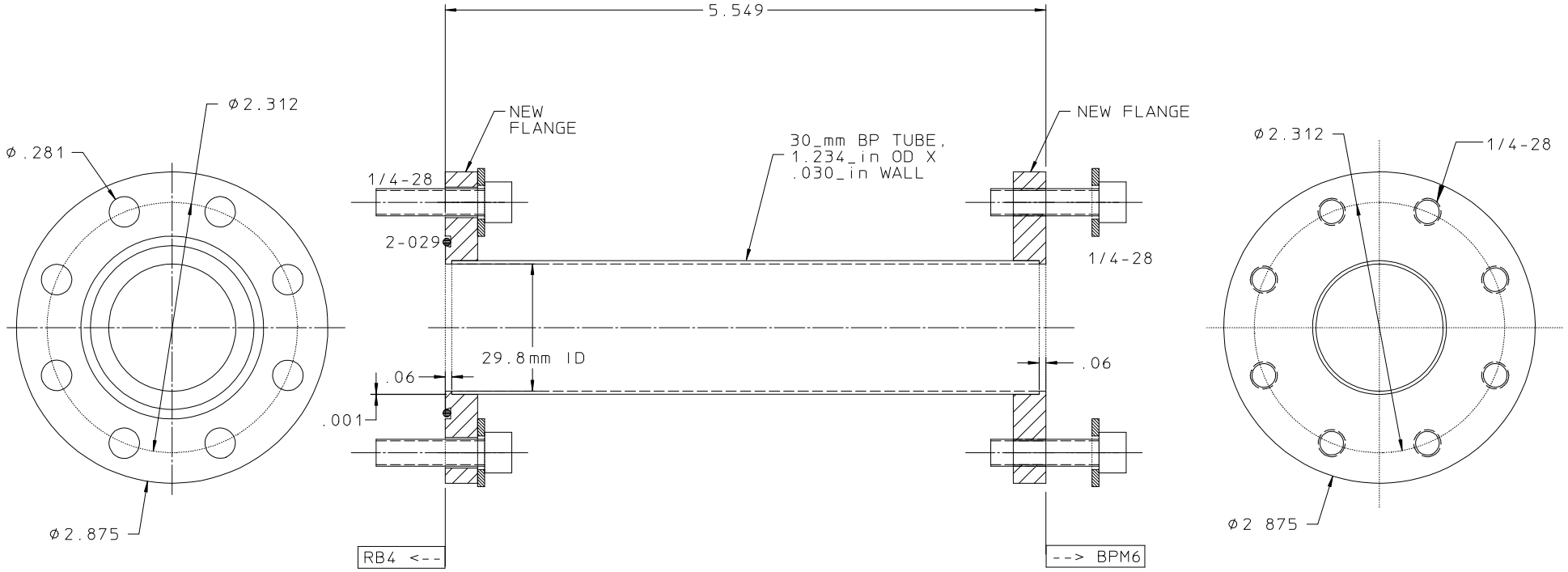
5.549
ϕ2.312
ϕ.281
NEW FLANGE
NEW FLANGE
30_mm BP TUBE,
1.234_in OD X
.030_in WALL
1/4-28
2-029
1/4-28
29.8mm ID
.06
.06
.001
ϕ2.875
RB4 <--
--> BPM6
ϕ2.312
1/4-28
ϕ2 875

BP 9

BEAM-->