Program - Project - Job: SNS-FES MEBT
Beam Transport Systems

Title: **Chopper Beambox Design Package**

1. Scope

This engineering note describes the mechanical design for the Chopper and Antichopper beamboxes. Included are: part and assembly drawings, a discussion of the mechanical design and the constraints imposed by physics requirements, CAD renderings and photographs, engineering calculations, outside vendor component information, and fiducialization data for the two beamboxes that were fabricated.

2. Drawings

25B420 4 E	CHOPPER ASSEMBLY INTERFACE
25B421 4 E	CHOPPER BOX WELDMENT
25B422 4 D	CHOPPER BOX BOTTOM PLATE
25B423 4 D	CHOPPER BOX END PLATE
25B425 4 D	CHOPPER BOX SIDE PLATE
25B426 4 C	CHOPPER BOX COVER ASSEMBLY
25B427 4 A	CHOPPER BOX HINGE ASSEMBLY
25B428 4 B	OUTER HINGE ASSEMBLY
25B429 4 E	CHOPPER BOX TOP PLATE
25B431 4 D	INNER HINGE ASSEMBLY
25B432 2 A	HINGE ASSEMBLY BEARING
25B433 4 B	CHOPPER BALL JOINT ASSEMBLY
25B434 3 A	CHOPPER BALL JOINT BRACKET
25B435 2 A	MICROMETER INTERFACE FLANGE
25B446 2 A	ROD END

Copies of all drawings are included in **Appendix A**.

3. Design Overview

Chopper beamboxes mounted on the first and third rafts of the MEBT contain traveling wave Chopper structures, provided by Los Alamos National Laboratory (LANL). The design process involved an ongoing exchange of information between LANL and LBNL, in order to avoid interferences and select feedthrough locations.

3.1 Alignment

The required positional accuracy of the Chopper Structures, with respect to the beam centerline, Is large compared to other beam transport components in the MEBT. The design goal was 10 percent of one sigma of the beam in the y-direction. With sigma equal to roughly

2 mm, the requirement for vertical alignment was set at 0.2 mm. The requirements in the x and z-directions were driven by mechanical, rather than beam transport considerations. Each Chopper structure will be suspended in its beambox on a hinge assembly at one end and an adjustable micrometer feedthrough at the other end, to enable pitch adjustment during tuning. The vertical location of the hinge assembly can be set with shim washers between the inside of the cover plate and the top of the hinge. The position of each Chopper structure will be set during assembly with respect to the interface plane of the cover plate. The mounting surface on the beambox has been fiducialized with respect to survey targets on the exterior of the beamboxes. This system will allow the position of the Choppers in the MEBT to be measured and adjusted with minimal disassembly.

3.2 Spatial Constraints

The mechanical design was spacially constrained by interfaces with adjacent beamline components in the MEBT. The inside dimensions of the beambox and the external dimensions of the Chopper structures were selected such that the Chopper structure could be assembled on the beambox cover and then inserted, from above, into the beambox. The external dimensions of the beambox were limited by the MEBT Profile Monitor beamboxes, installed on the ends of the Chopper beamboxes.

The location of numerous vacuum feedthroughs on the cover plate was carefully selected to simplify connections inside the beambox. Each cover plate contains the following ports for feedthroughs, all are 2-3/4" Conflat™ flanges:

- Four flanges for individual high-voltage feedthroughs (LANL will provide).
- Two scraper signal feedthrough flanges for a total of 4 BNC connectors (LANL will provide).
- One water feedthrough flange for cooling water inlet and outlet lines (LANL will provide).
- One micrometer feedthrough flange for support and alignment of the end of the each Chopper structure (LBNL will provide micrometer feedthrough).

Three ports are provided on either side of the beambox (4-1/2 Conflat flanges) for Pyrex glass viewports. These viewports will make possible visible inspection of the meander line structure down the entire length of the Chopper during operation.

3.3 Deformation and Natural Frequency Analysis

Vacuum deflection calculations were performed to verify the stability of the vertical position of the Chopper structures. The analysis concluded that changes in barometric pressure would have no noticeable affect on the alignment of the Chopper structures during operation. The natural frequency of the Chopper assemblies on the MEBT rafts was determine to be adequately high, well above 100 Hz, to avoid excessive resonance during transportation or seismic events.

4. Fabrication and Assembly

The beambox is comprised of One-half-inch-thick 304 stainless steel plate, with vacuum-tight welds on the interior and structural welds on the exterior. Because the clearance between the

Chopper structures and the inside walls on the ends of the beamboxes is small, care was taken to incorporate indexing features in the plates to align them during welding. Special care was taken during design and fabrication to correctly position beamline holes on the end walls of the beambox in relationship to the surface of the top flange.

The two beamboxes were identically fabricated. After fabrication, the beamboxes were measured on a coordinate measurement machine and unique part numbers were etched on the top flange of each weldment. Unique mounting shims were fabricated to compensate for the slight differences in the location of the mounting feet which were measured during fiducializatoin.

5. SNS - FES Personnel

Daryl Oshatz, MEBT Lead Mechanical Engineer
Andrew S Zachoszcz, Design Engineer
Don Syversrud, Lead Mechanical Technician

6. References

[1] D. Oshatz, A. DeMello, L. Doolittle, P. Luft, J. Staples, A. Zachoszcz "Mechanical Design Of The SNS MEBT," PAC '01, Chicago, June 2001.
URL: http://pacwebserver.fnal.gov/papers/Tuesday/AM_Poster/TPAH152.pdf

[2] D. Oshatz, "FE-ME-045, MEBT Chopper Systems Coordination Meeting," January 11, 2001.

7. Appendices

Appendix A: Component and Assembly Drawings
Appendix B: CAD Images and photographs
Appendix C: Engineering Calculations
Appendix D: Outside Vendor Component Information
Appendix E: Beambox Fiducialization Data

APPENDIX A

Component and Assembly Drawings

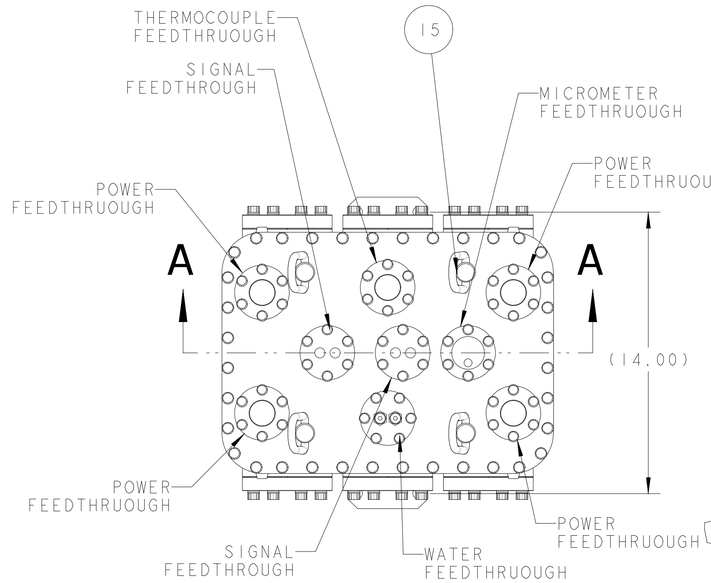

SCALE 1/4

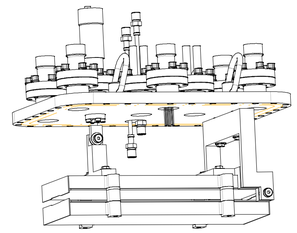

CHOPPER PLATES VIEW
SCALE 3/16

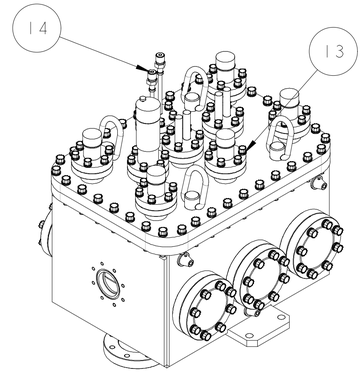

SCALE 3/16

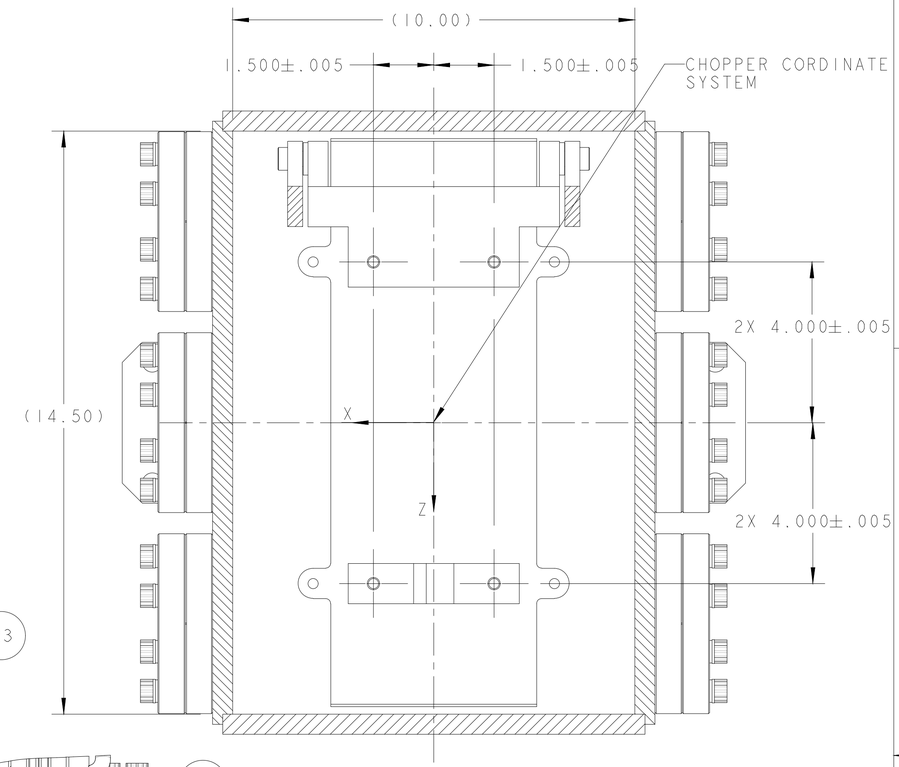

SECTION C-C
SCALE 1/2

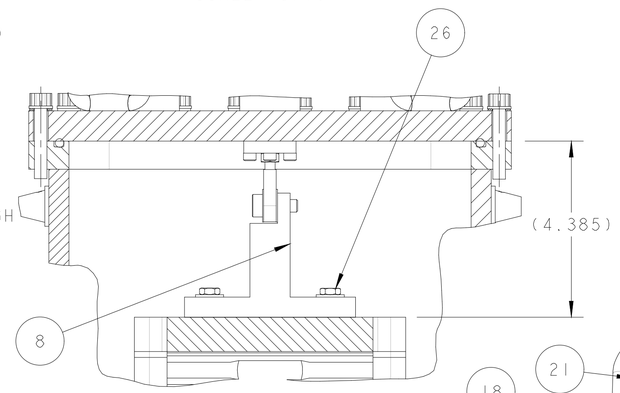

SECTION D-D
SCALE 1/2

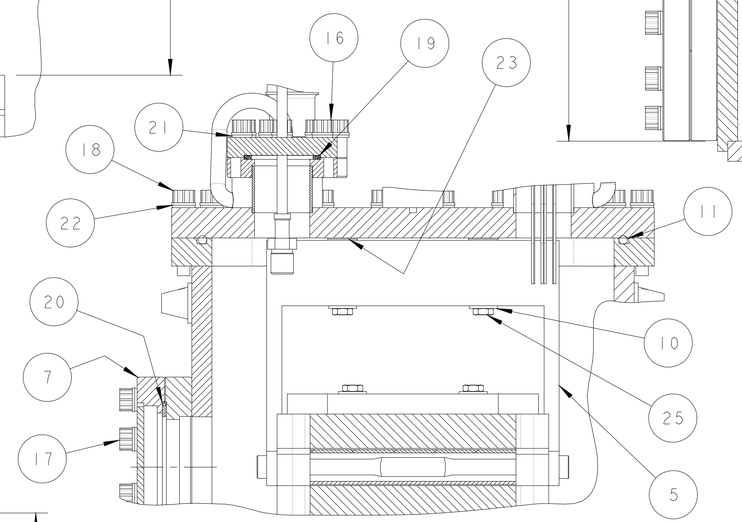

SECTION E-E
SCALE 1/2

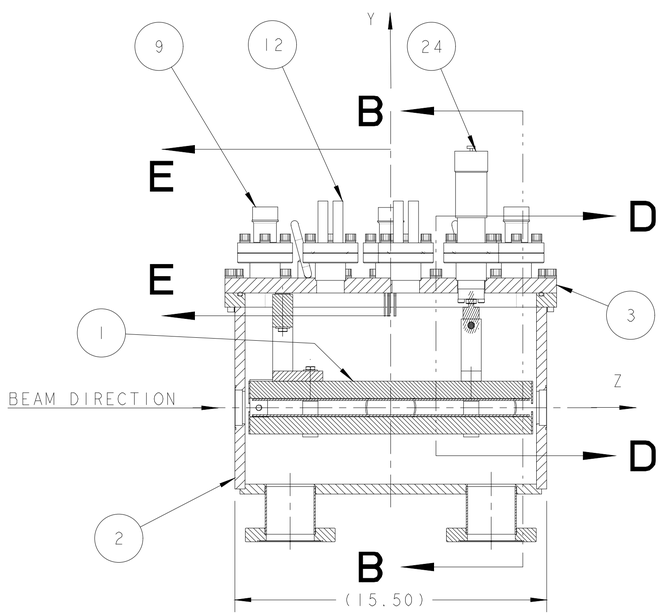

SECTION A-A

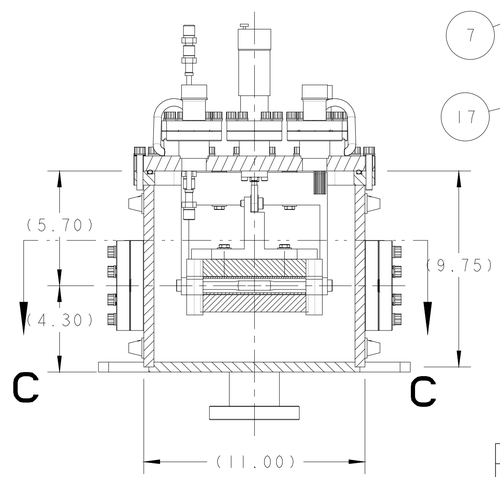

SECTION B-B

ITEM	PART NO	REQD	DESCRIPTION	MATERIAL
26		4	HEX. HD. BOLT 1/4"-28 UNF 2A, 1.00, VENTED	18-8 SS
25		2	HEX HD. BOLT 1/4"-28 UNF, 2.00, VENTED	18-8 SS
24	L-2211	1	CHOPPER MICROMETER FEEDTHROUGH, HUNTINGTON	-
23	98126A210	4	HINGE ASSEMBLY SHIM, MCMASTER-CARR OR EQUIV.	-
22	98017A690	85	5/16" FLAT WASHER AN 960 , MCMASTER-CARR OR EQUIV	-
21	98017A660	54	1/4" DIA FLAT WASHER AN 960 , MCMASTER-CARR OR EQUIV	18-8 SS
20	191009	6	2.51 ID GASKET, COPPER, MDC	-
19	191004	9	1.53 ID GASKET, COPPER, MDC	-
18	190059	36	12 POINT BOLT 5/16-24 UNF X 1 3/4, SILVER PLATED, MDC	-
17	190058	48	12 POINT BOLT 5/16-24 UNF X 1 1/4, SILVER PLATED, MDC	-
16	190057	54	12 POINT BOLT 1/4-28 UNF X 7/8, SILVER PLATED, MDC	-
15	33112	4HOIST RING, 1/4" BOLT, 550 LB LOAD, AMERICAN DRILL BUSHING CO.		
14	-	1	WATER FEEDTHROUGH (LANL)	-
13	-	1	THERMOCOUPLE FEEDTHROUGH (LANL)	-
12	-	2	SIGNAL FEEDTHROUGH (LANL)	-
11	-	1	O-RING, PARKER #2-384	VITON A
10	-	6	FLAT WASHER 1/4"	18-8 SS
9		4	POWER FEEDTHROUGH (LANL)	
8	25B433	1	CHOPPER BALL JOINT ASSEMBLY	-
7	450004	6	4 1/2" CONFLAT VIEW PORT, MDC	-
5	25B427	1	CHOPPER BOX HINGE ASSEMBLY	-
3	25B426	1	CHOPPER BOX COVER ASSEMBLY	-
2	25B421	1	CHOPPER BOX WELDMENT	-
1	-	1	CHOPPER PLATES ASSY (LANL)	-

REV	DWG	CHK	ZONE	DATE	CHANGES
E	AZ			5/1/01	UPDATED MODEL
E	AZ			5/1/01	ADDED MISSING O-RING #2-384 PARKER TO BOM
D	AZ			3/22/01	UPDATED MODEL
C	AZ			2/5/01	UPDATED MODEL
B	AZ			1/10/01	CORRECTED INTERFERENCE PROBLEMS WITH CHOPPER PLATES.
A	AZ			2/01/00	INITIAL RELEASE.

UNLESS OTHERWISE SPECIFIED
PROJECTION:
TOLERANCES: X.X ± 0.1 | FRAC. ± 1/64; X.XX ± 0.03 | Angles ± 1.0°; X.XXX ± 0.010 | FINISH 125√
DO NOT SCALE PRINT
THREADS ARE CLASS 2
CHAMFER ENDS OF ALL SCREW TREADS 30°
CUT ROUND, 1.5 THREAD RELIEF ON MACHINED THREADS
BREAK EDGES .016 MAX. ON MACHINED WORK
REMOVE BURRS, WELD SPLATTER & LOOSE SCALE
IN ACCORDANCE WITH ASME Y14.5M & B46.1

SHOP ORDERS

ACCT NO.	NO. REQD 1	SER NO. -	
		DATE ISSD -	
DEL TO		DATE REQD -	
SURFACE TREATMT -			
IDENT METHOD TAG			
PROJECT NUMBER na			
PROJECT NAME N/A			
DWG BY Andrew Zachoszcz		DATE 25-Sep-00	
CHK BY Daryl Oshatz		DATE	
APR BY Daryl Oshatz		DATE	

ERNEST ORLANDO LAWRENCE BERKELEY NATIONAL LABORATORY
UNIVERSITY OF CALIFORNIA - BERKELEY

SNS - FES MEBT
BEAM TRANSPORT SYSTEMS
CHOPPER ASSEMBLY

MICROFILMED:	DWG. TYPE	SHOWN ON	SCALE: 1/4	DO NOT SCALE PRINTS
	ASSEM	-	SHEET 1 OF 1	
PATENT CLEAR:	DESIGN ACCT. NO.	CATEGORY CODE	DWG. NO.	SIZE / REV.
	-	FE3312	25B4204	E

Dwg. File: 25B420 Model File: 25B420

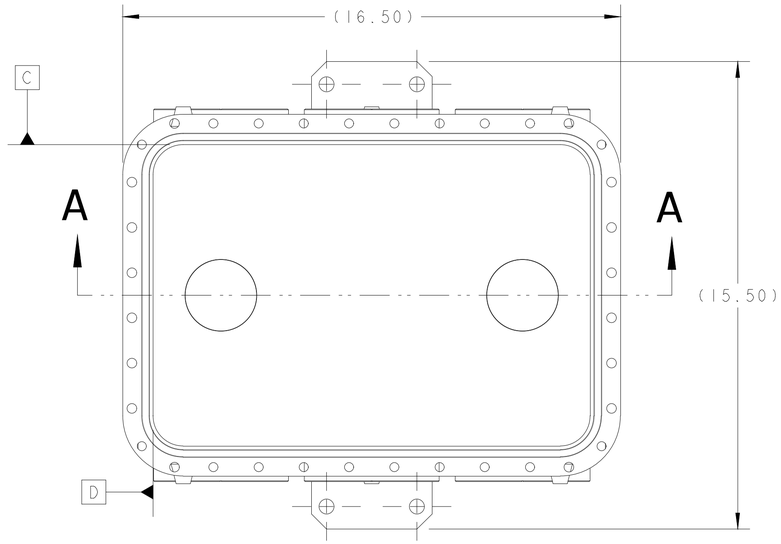

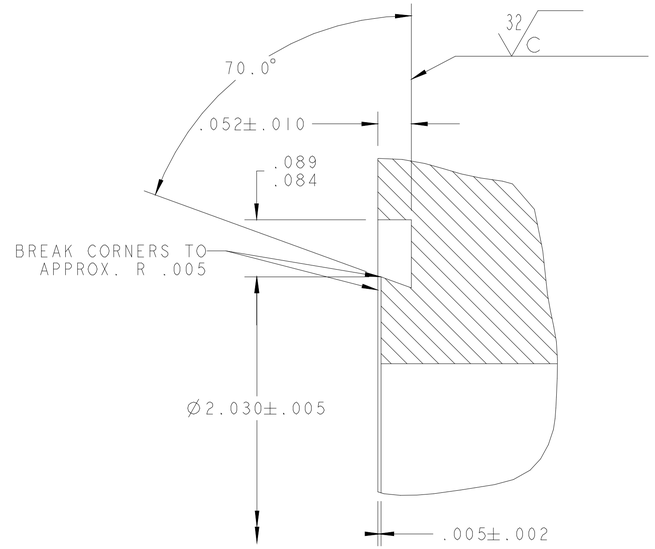

DETAIL **B**
SCALE 8/1

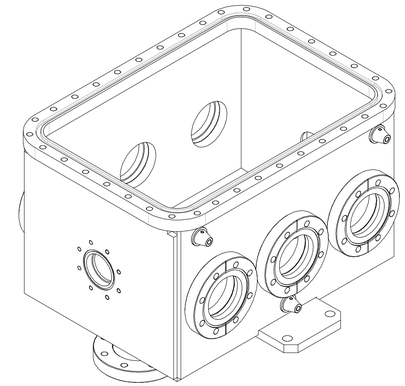

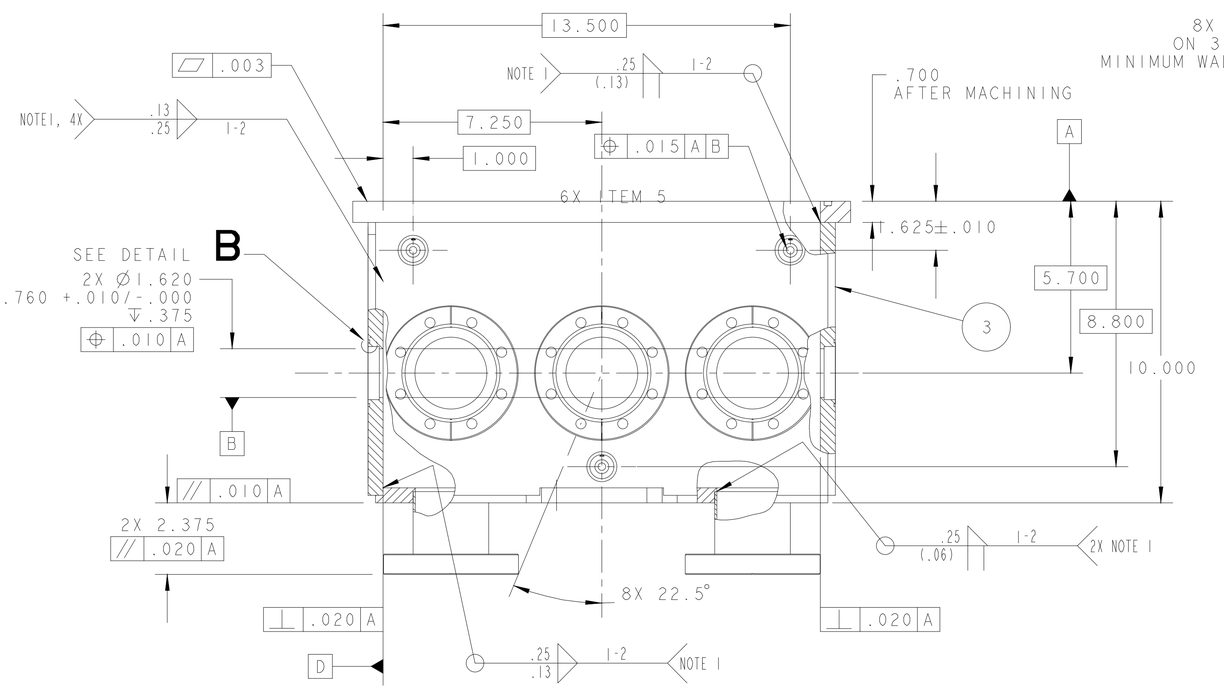

PARTIAL VIEW SECTION **A-A**

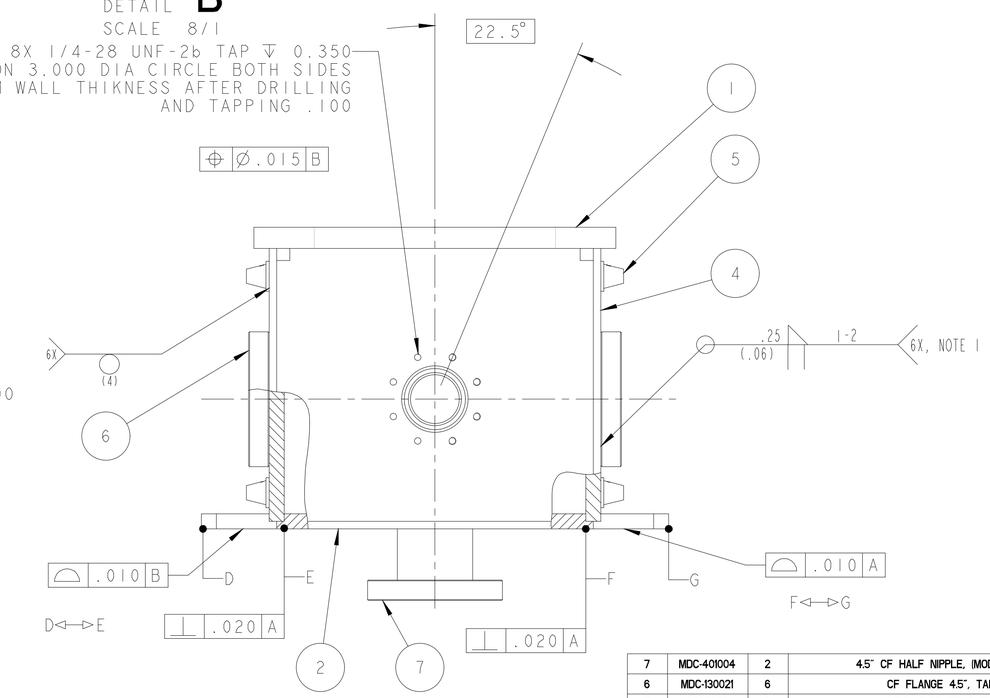

PARTIAL SECTION **B-B**

ITEM	PART NO	REQD	DESCRIPTION	MATERIAL
7	MDC-401004	2	4.5" CF HALF NIPPLE, (MODIFY AS REQUIRED)	304 SS
6	MDC-130021	6	CF FLANGE 4.5", TAPPED HOLES	304 SS
5	28Q5363	6	LBNL SUPPLIED SURVEY FIXTURE	17-4-PH SS
4	25B425	2	CHOPPER BOX SIDE PLATE	304 SS
3	25B423	2	CHOPPER BOX END PLATE	304 SS
2	25B422	1	CHOPPER BOX BOTTOM PLATE	304 SS
1	-	1	CHOPPER BOX TOP FLANGE	304 SS

NOTES:

1. FINISHED PART TO BE VACUUM TIGHT.
   LEAK RATE NOT TO EXCEED 1 X 10^-8 TORR - LITERS PER SECOND HELIUM.
2. ULTRA-HIGH VACUUM CLEANING AND PACKING REQUIRED.
3. ASSEMBLE IN CLEAN ENVIRONMENT.
   AFTER ASSEMBLY AND WELDING, WRAP TO MAINTAIN CLEANLINESS.
4. PROTECT CONFLAT FLANGE KNIFE EDGE AT ALL TIMES.

REV	DWG	CHK	ZONE	DATE	CHANGES
E	AZ		B3, 4	3/22/01	CHANGED VIEW TO PARTIAL SECTION B-B
E	AZ		B3, 4	3/22/01	PERPENDICULARITY WAS .005 IS .020
D	AZ			2/7/01	EXTENDED BOTTOM PLATE, ADDED CHAMFERS TO END PLATES
C	AZ			2/5/01	UPPER FIDUCIALS LOWERED
B	AZ			1/20/01	CORRECTED INTERFERENCE PROBLEMS WITH CHOPPER PLATES.
A	AZ			1/15/01	INITIAL RELEASE.

UNLESS OTHERWISE SPECIFIED
PROJECTION:
TOLERANCES: X.X ± 0.1 | FRAC. ± 1/64 | X.XX ± 0.03 | Angles ± 10° | X.XXX ± 0.010 | FINISH 125
DO NOT SCALE PRINT
THREADS ARE CLASS 2
CHAMFER ENDS OF ALL SCREW THREADS 30°
CUT ROUND, 1.5 THREAD RELIEF ON MACHINED THREADS
BREAK EDGES .016 MAX. ON MACHINED WORK
REMOVE BURRS, WELD SPLATTER & LOOSE SCALE
IN ACCORDANCE WITH ASME Y14.5M & B461

SHOP ORDERS
ACCT NO. | NO. REQD | DATE ISSD -
DEL TO | DATE REQD -
SURFACE TREATMT -
IDENT METHOD TAG
PROJECT NUMBER na
PROJECT NAME N/A
DWG BY A ZACHOSZCZ | DATE 06-Feb-01
CHK BY D. OSHATZ | DATE
APR BY D. OSHATZ | DATE

ERNEST ORLANDO LAWRENCE
BERKELEY NATIONAL LABORATORY
UNIVERSITY OF CALIFORNIA - BERKELEY

SNS - FES MEBT
BEAM TRANSPORT SYSTEMS
CHOPPER BOX WELDMENT

MICROFILMED: | DWG. TYPE ASSEM | SHOWN ON - | SCALE: 3/8 | DO NOT SCALE PRINTS
SHEET 1 OF 2
PATENT CLEAR: | DESIGN ACCT. NO. - | CATEGORY CODE FE3312 | DWG. NO. 25B4214 | SIZE | REV. E

Dwg. Size 25B4214 Model File: 25B4214

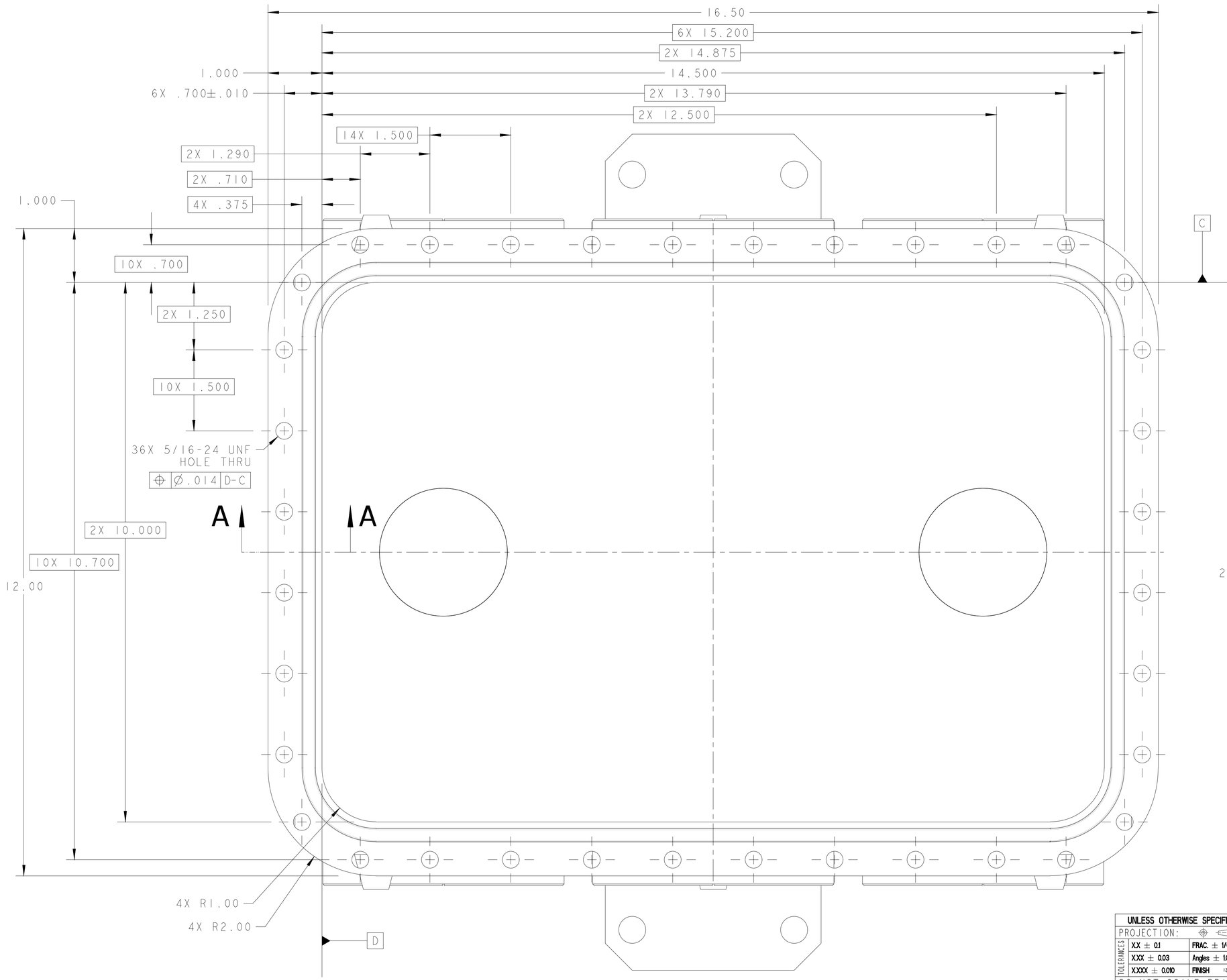

SCALE 1/1

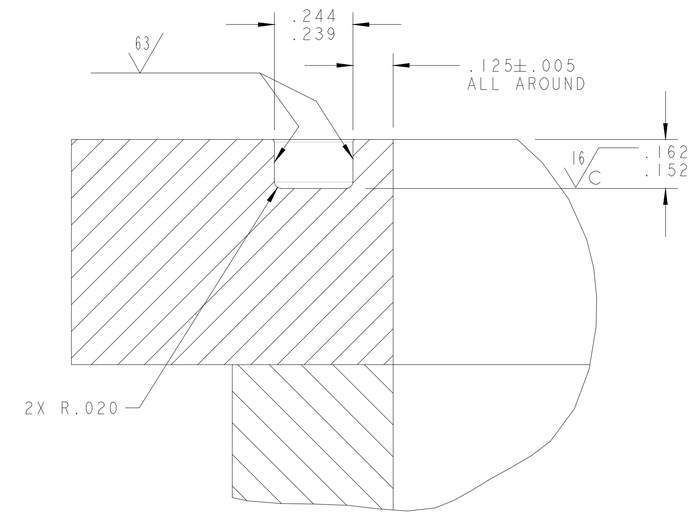

SECTION A-A
SCALE 4/1

1/2" PLATE	304 SS	-
DESCRIPTION	MATERIAL	MAT. LOCATION

UNLESS OTHERWISE SPECIFIED
PROJECTION:
TOLERANCES: X.X ± 0.1 | FRAC. ± 1/64 | X.XX ± 0.03 | Angles ± 10° | X.XXX ± 0.010 | FINISH 125
DO NOT SCALE PRINT
THREADS ARE CLASS 2
CHAMFER ENDS OF ALL SCREW TREADS 30°
CUT ROUND, 15 THREAD RELIEF ON MACHINED THREADS
BREAK EDGES .016 MAX. ON MACHINED WORK
REMOVE BURRS, WELD SPLATTER & LOOSE SCALE
IN ACCORDANCE WITH ASME Y14.5M & B461

SHOP ORDERS

ACCT NO.	NO. REQD	SER NO.	-
		DATE ISSD	-
DEL TO		DATE REQD	-
SURFACE TREATMT	-		
IDENT METHOD	TAG		
PROJECT NUMBER	na		
PROJECT NAME	N/A		
DWG BY	A ZACHOSZCZ	DATE	19-Dec-00
CHK BY	D. OSHATZ	DATE	
APR BY	D. OSHATZ	DATE	

ERNEST ORLANDO LAWRENCE
BERKELEY NATIONAL LABORATORY
UNIVERSITY OF CALIFORNIA - BERKELEY

SNS - FES MEBT
BEAM TRANSPORT SYSTEMS
CHOPPER BOX WELDMENT

MICROFILMED:	DWG. TYPE	SHOWN ON	SCALE: 1/2	DO NOT SCALE PRINTS
	ASSEM	-	SHEET 2 OF 2	
PATENT CLEAR:	DESIGN ACCT. NO.	CATEGORY CODE	DWG. NO.	SIZE / REV.
	-	FE3312	25B4214	E

Dwg. File 25B4214 Model File 25B4214

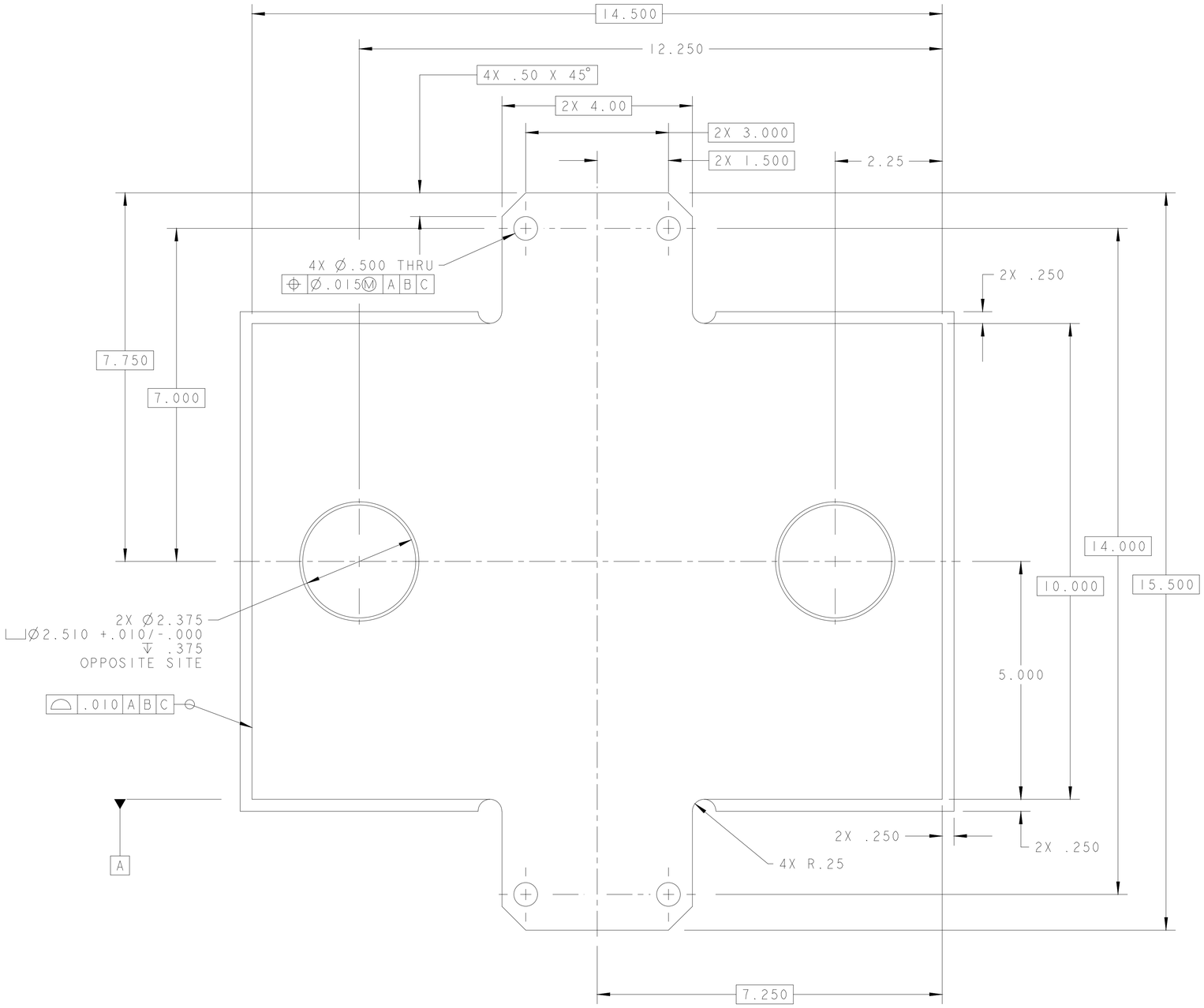

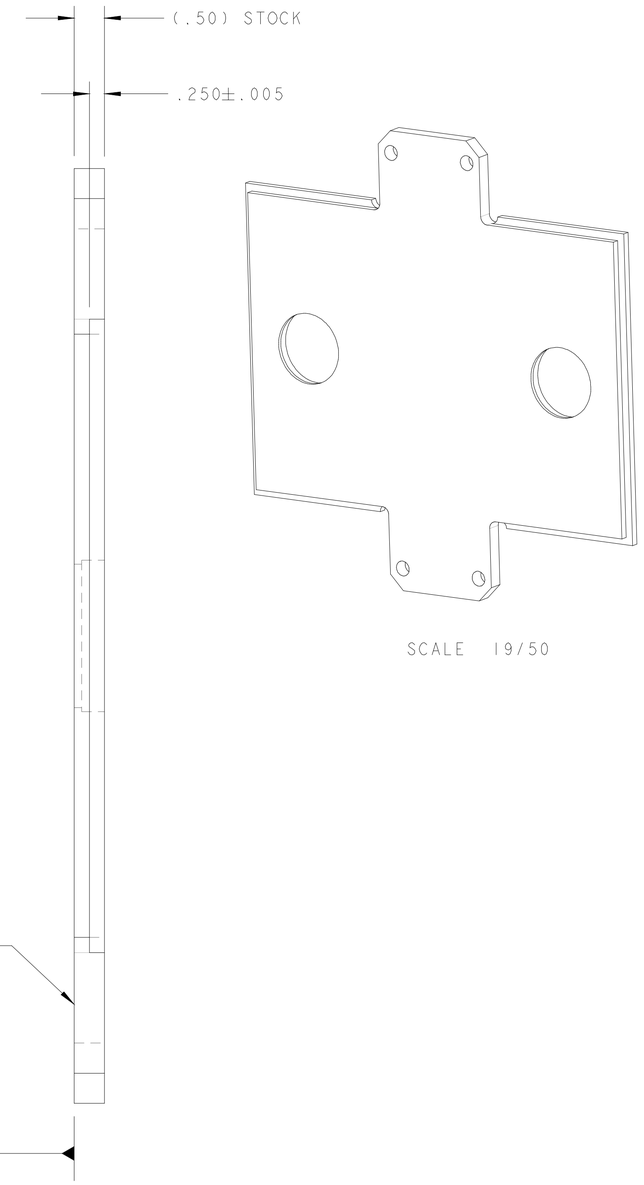

SCALE 19/50

REV	DWG	CHK	ZONE	DATE	CHANGES
D	AZ			3/20/01	ADDED 1/4" STEPS TO IMPROVE ASSEMBLY WORK
C	AZ			2/7/01	EXTENDED PLATE FROM 14.500 TO 15.000
B	AZ			1/23/01	UPDATED MODEL.
A	AZ			1/10/01	INITIAL RELEASE

UNLESS OTHERWISE SPECIFIED
PROJECTION:
TOLERANCES: X.X ± 0.1 | FRAC. ± 1/64 | X.XX ± 0.03 | Angles ± 1.0° | X.XXX ± 0.010 | FINISH 125
DO NOT SCALE PRINT
THREADS ARE CLASS 2
CHAMFER ENDS OF ALL SCREW TREADS 30°
CUT ROUND, 1.5 THREAD RELIEF ON MACHINED THREADS
BREAK EDGES .016 MAX. ON MACHINED WORK
REMOVE BURRS, WELD SPLATTER & LOOSE SCALE
IN ACCORDANCE WITH ASME Y14.5M & B46.1

DESCRIPTION	MATERIAL	MAT. LOCATION
1/2" PLATE	304 SS	-

SHOP ORDERS
ACCT NO. | NO. REQD | SER NO. -
DEL TO | DATE ISSD - | DATE REQD -
SURFACE TREATMT -
IDENT METHOD TAG
PROJECT NUMBER na
PROJECT NAME N/A
DWG BY A ZACHOSZCZ | DATE 13-Dec-00
CHK BY None | DATE
APR BY None | DATE

ERNEST ORLANDO LAWRENCE
BERKELEY NATIONAL LABORATORY
UNIVERSITY OF CALIFORNIA - BERKELEY

SNS
SNS - FES MEBT
BEAM TRANSPORT SYSTEMS
CHOPPER BOX BOTTOM PLATE

MICROFILMED: | PATENT CLEAR:
DWG. TYPE: PART | SHOWN ON: 25B421 | SCALE: 3/4 | DO NOT SCALE PRINTS
SHEET 1 OF 1
DESIGN ACCT. NO.: - | CATEGORY CODE: FE3312 | DWG. NO. 25B4224 | SIZE D | REV.

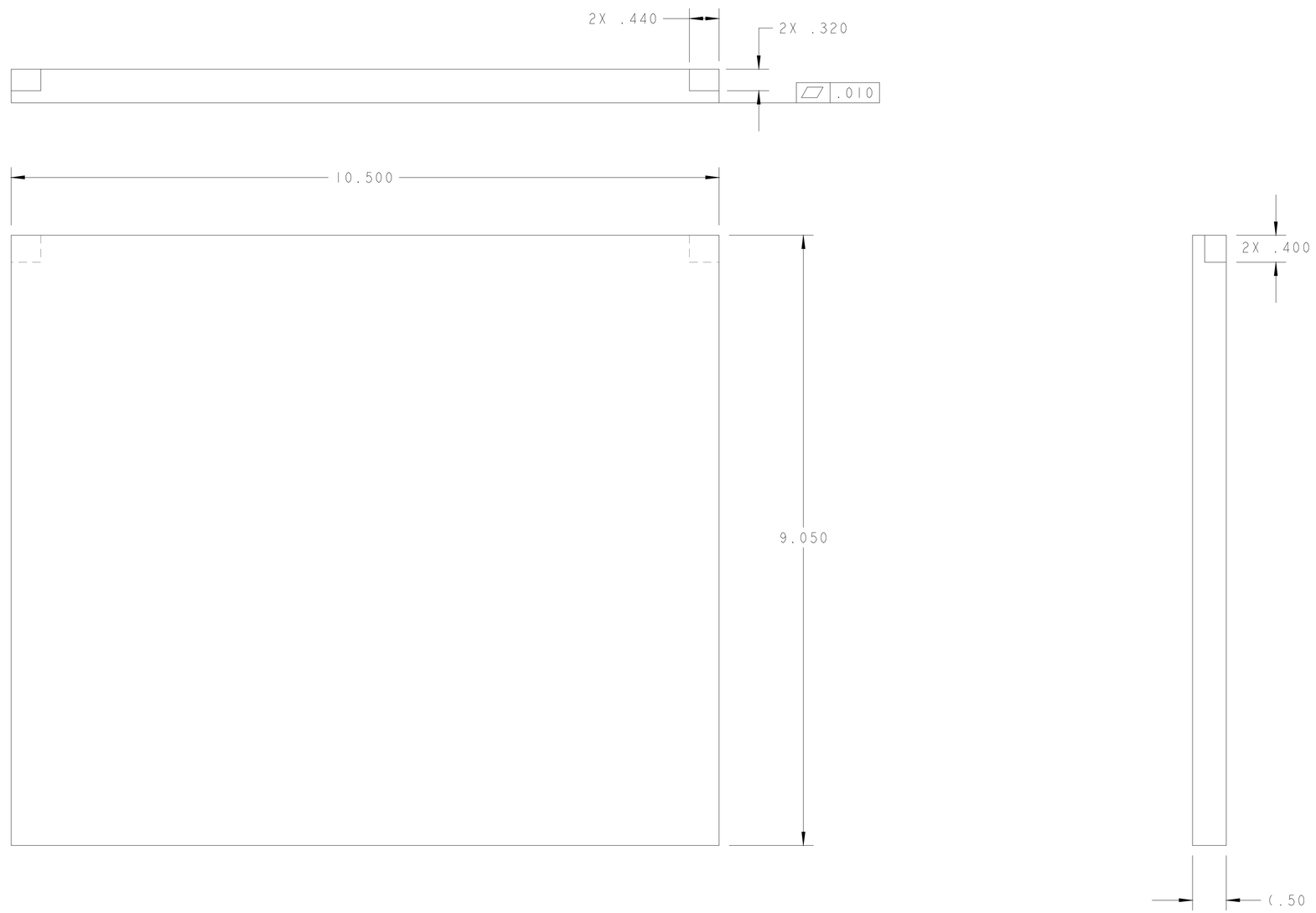

DESCRIPTION	MATERIAL	MAT. LOCATION
1/2" PLATE	304 SS	-

REV	DWG	CHK	ZONE	DATE	CHANGES
D	AZ			3/20/01	MODIFIED CORNER CUTS
D	AZ			3/20/01	DIMENSION 10.000 IS 10.500, 8.800 IS 9.050
C	AZ			2/7/01	ADDED CHAMFERS
B	AZ			1/23/01	UPDATED MODEL
A	AZ			1/10/01	INITIAL RELEASE

UNLESS OTHERWISE SPECIFIED
PROJECTION:

TOLERANCES		
	X.X ± 0.1	FRAC. ± 1/64
	X.XX ± 0.03	Angles ± 1.0°
	X.XXX ± 0.010	FINISH 125

DO NOT SCALE PRINT
THREADS ARE CLASS 2
CHAMFER ENDS OF ALL SCREW TREADS 30°
CUT ROUND, 1.5 THREAD RELIEF ON MACHINED THREADS
BREAK EDGES .016 MAX. ON MACHINED WORK
REMOVE BURRS, WELD SPLATTER & LOOSE SCALE
IN ACCORDANCE WITH ASME Y14.5M & B46.1

SHOP ORDERS
ACCT NO. | NO. REQD | SER NO. -
DEL TO | DATE ISSD -
DATE REQD -
SURFACE TREATMT -
IDENT METHOD TAG
PROJECT NUMBER na
PROJECT NAME N/A
DWG BY A ZACHOSZCZ | DATE 08-Dec-00
CHK BY None | DATE
APR BY None | DATE

ERNEST ORLANDO LAWRENCE
BERKELEY NATIONAL LABORATORY
UNIVERSITY OF CALIFORNIA - BERKELEY

SNS - FE MEBT
BEAM TRANSPORT SYSTEMS
CHOPPER BOX END PLATE

MICROFILMED:
PATENT CLEAR:
DWG. TYPE: PART
SHOWN ON: 25B421
SCALE: 1/1
DO NOT SCALE PRINTS
SHEET 1 OF 1
DESIGN ACCT. NO.: -
CATEGORY CODE: FE3312
DWG. NO.: 25B4234
SIZE: D
REV.: D

Dwg. File: 25B423 Model File: 25B423

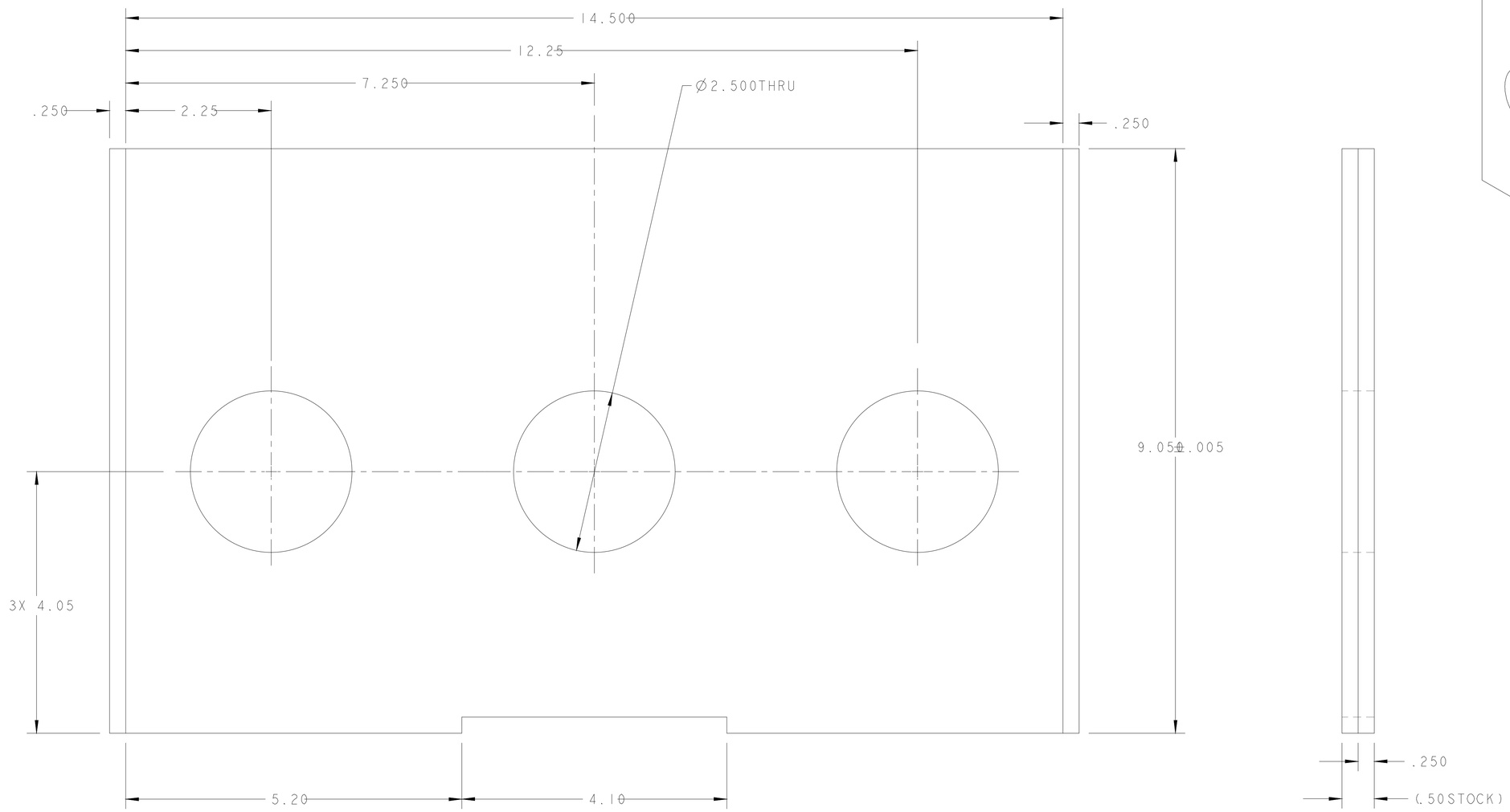

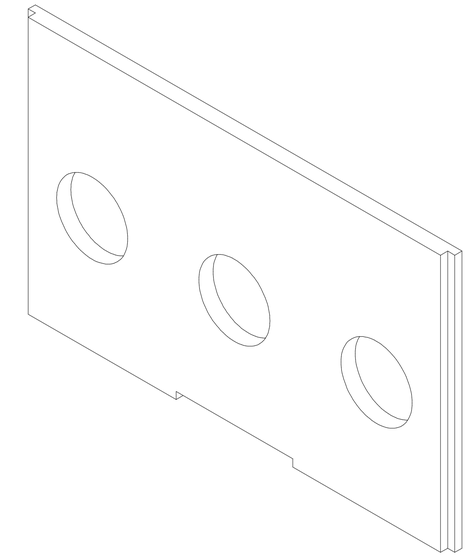

SCALE 1/2

1/2" PLATE	304 SS	-
DESCRIPTION	MATERIAL	MAT. LOCATION

REV	DWG	CHK	ZONE	DATE	CHANGES
D	AZ			3/22/01	ADDED .25" TABS ON ENDS AND .25" CUT IN THE MIDLE
C	AZ			2/2/01	RAISED WINDOW HOLES FROM 3.5" TO 3.8"
B	AZ		C2	1/23/01	CHANGED DIMENSION 8.500 TO 8.800
A	AZ			1/15/01	INITIAL RELEASE.

UNLESS OTHERWISE SPECIFIED
PROJECTION:

TOLERANCES	
X.X± 0.1	FRAC. ± 1/64
X.XX± 0.03	Angles ±1°
X.XXX± 0.010	FINISH 125

DO NOT SCALE PRINT

THREADS ARE CLASS 2
CHAMFER ENDS OF ALL SCREW TREADS 30°
CUT ROUND, 1.5 THREAD RELIEF ON MACHINED THREADS
BREAK EDGES .016 MAX. ON MACHINED WORK
REMOVE BURRS, WELD SPLATTER & LOOSE SCALE
IN ACCORDANCE WITH ASME Y14.5M&46.1

SHOP ORDERS

ACCT. NO.	NO. REQD	SER NO.	-
		DATE ISSD	-
DEL TO		DATE REQD	-
SURFACE TREATMT	-		
IDENT METHOD	TAG		
PROJECT NUMBER	na		
PROJECT NAME	N/A		
DWG BY	A ZACHOSZCZ	DATE	08-Dec-00
CHK BY	None	DATE	
APR BY	None	DATE	

ERNEST ORLANDO LAWRENCE BERKELEY NATIONAL LABORATORY
UNIVERSITY OF CALIFORNIA - BERKELEY

SNS - FE MEBT
BEAM TRANSPORT SYSTEMS
CHOPPER BOX SIDE PLATE

MICROFILMED:	DWG. TYPE	SHOWN ON	SCALE: 1/1	DO NOT SCALE PRINTS
	PART	25B421	SHEET 1 OF 1	
PATENT CLEAR:	DESIGN ACCT. NO.	CATEGORY CODE	DWG. NO.	SIZE / REV.
	-	FE3312	25B4254	D

Dwg. F:\DRAFT\ Model F:\DRAFT

DWG. NO.	SIZE	REV.	SH.
25B4264		C	1

NOTES:

1. FINISHED PART TO BE VACUUM TIGHT.
   LEAK RATE NOT TO EXCEED 1 X 10^-8 TORR - LITERS PER SECOND HELIUM.
2. ULTRA-HIGH VACUUM CLEANING AND PACKING REQUIRED.
3. ASSEMBLE IN CLEAN ENVIRONMENT.
   AFTER ASSEMBLY AND WELDING, WRAP TO MAINTAIN CLEANLINESS.
4. PROTECT CONFLAT FLANGE KNIFE EDGE AT ALL TIMES.
5. PROTECT POLISHED O-RING SURFACE AT ALL TIMES.

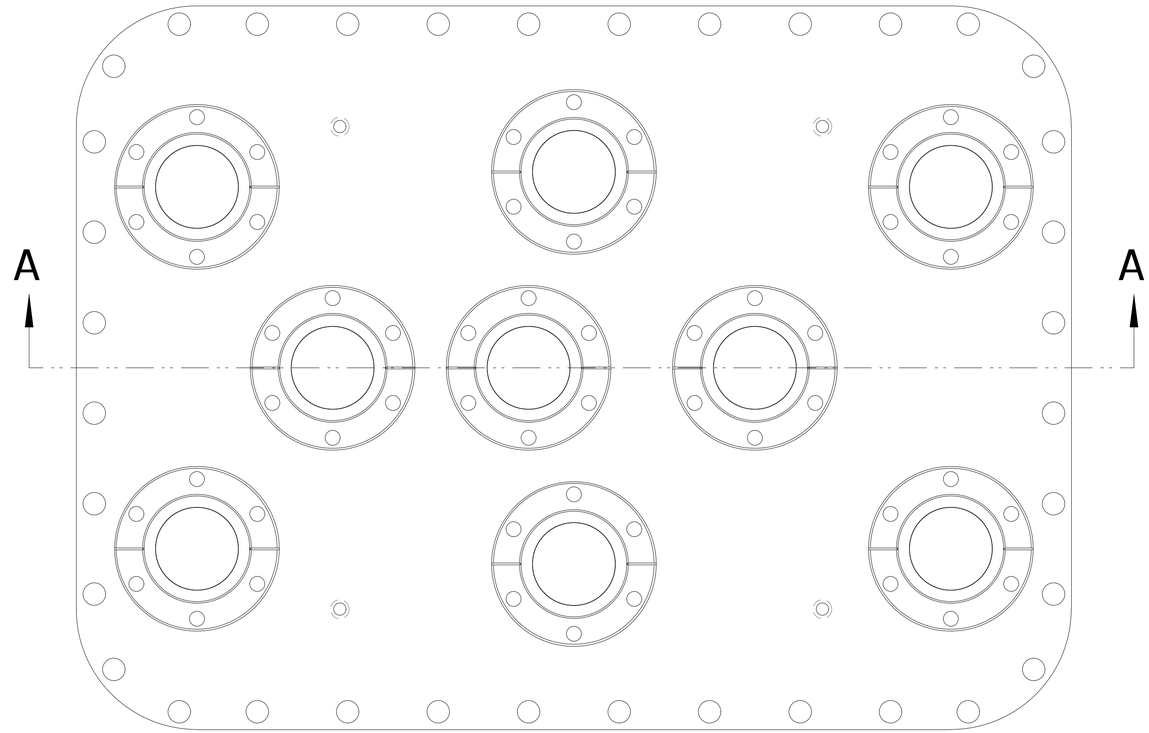

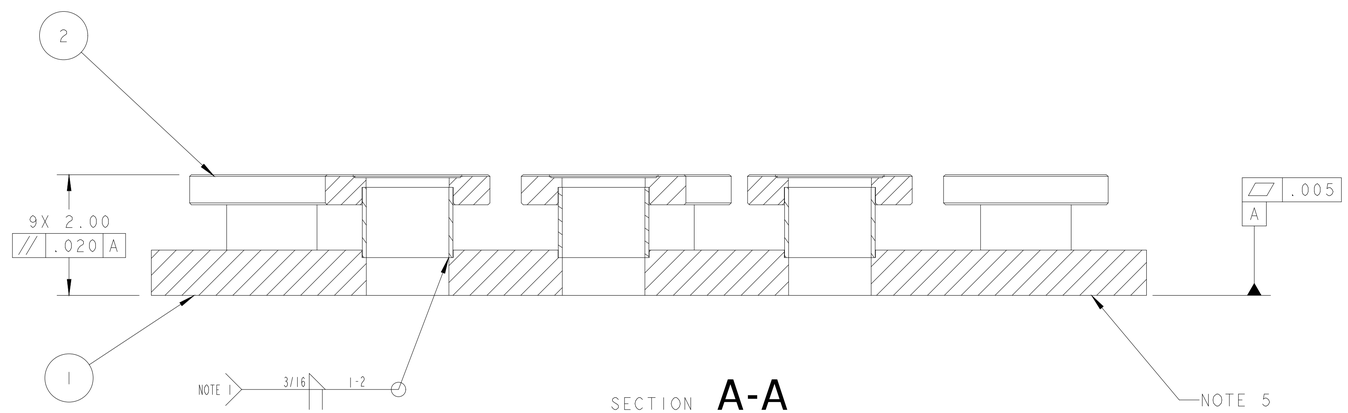

SECTION **A-A**

ITEM	PART NO	REQD	DESCRIPTION	MATERIAL
2	401002	9	2 3/4" CF NIPPLE, MDC CATALOG	-
1	25B429	1	CHOPPER BOX TOP PLATE	304 SS

REV	DWG	CHK	ZONE	DATE	CHANGES
C	AZ			2/7/01	CHANGED PLATE THICKNESS & C/BORE DEPTH
B	AZ			1/23/01	UPDATED MODEL
A	AZ			1/10/01	INITIAL RELEASE

UNLESS OTHERWISE SPECIFIED

PROJECTION:

TOLERANCES: X.X ± 0.1 | FRAC. ± 1/64 | X.XX ± 0.03 | Angles ± 10° | X.XXX ± 0.010 | FINISH 125

DO NOT SCALE PRINT

THREADS ARE CLASS 2
CHAMFER ENDS OF ALL SCREW TREADS 30°
CUT ROUND, 15 THREAD RELIEF ON MACHINED THREADS
BREAK EDGES .016 MAX. ON MACHINED WORK
REMOVE BURRS, WELD SPLATTER & LOOSE SCALE
IN ACCORDANCE WITH ASME Y14.5M & B461

SHOP ORDERS

ACCT NO.	NO. REQD	SER NO.	-
DEL. TO		DATE ISSD	-
		DATE REQD	-
SURFACE TREATMT	-		
IDENT METHOD	TAG		
PROJECT NUMBER	na		
PROJECT NAME	N/A		
DWG BY	A ZACHOSZCZ	DATE	23-Jan-01
CHK BY	None	DATE	
APR BY	None	DATE	

ERNEST ORLANDO LAWRENCE
BERKELEY NATIONAL LABORATORY
UNIVERSITY OF CALIFORNIA - BERKELEY

SNS - FE MEBT
BEAM TRANSPORT SYSTEMS
CHOPPER BOX COVER ASSEMBLY

MICROFILMED:	DWG. TYPE	SHOWN ON	SCALE: 3/4	DO NOT SCALE PRINTS
	ASSEM	25B420	SHEET 1 OF 1	
PATENT CLEAR:	DESIGN ACCT. NO.	CATEGORY CODE	DWG. NO.	SIZE	REV.
	-	FE3312	25B4264		C

Dwg File: 25B420 Model File: 25B420

Rev. 07/09/99 - 2.0 - Mater

DWG. NO.	SIZE	REV.	SH.
25B4274		A	1

NOTES:

1. ASSEMBLE IN CLEAN ENVIRONMENT.
   AFTER ASSEMBLY, WRAP TO MAINTAIN CLEANLINESS.
2. TO ACHIEVE PROPER LOCATION OF CHOPPER PLATES
   SHIMS MAY BE ADDAED.

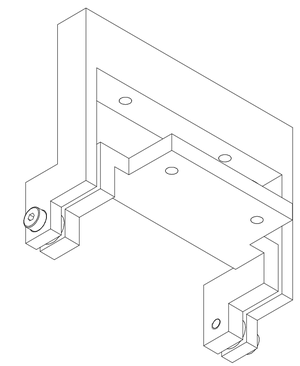

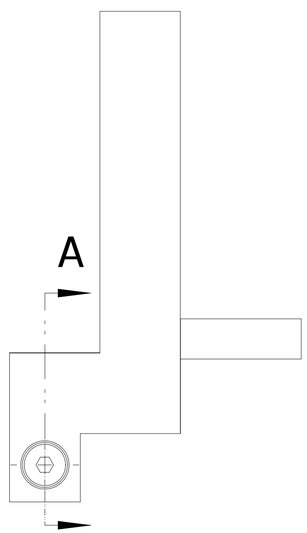

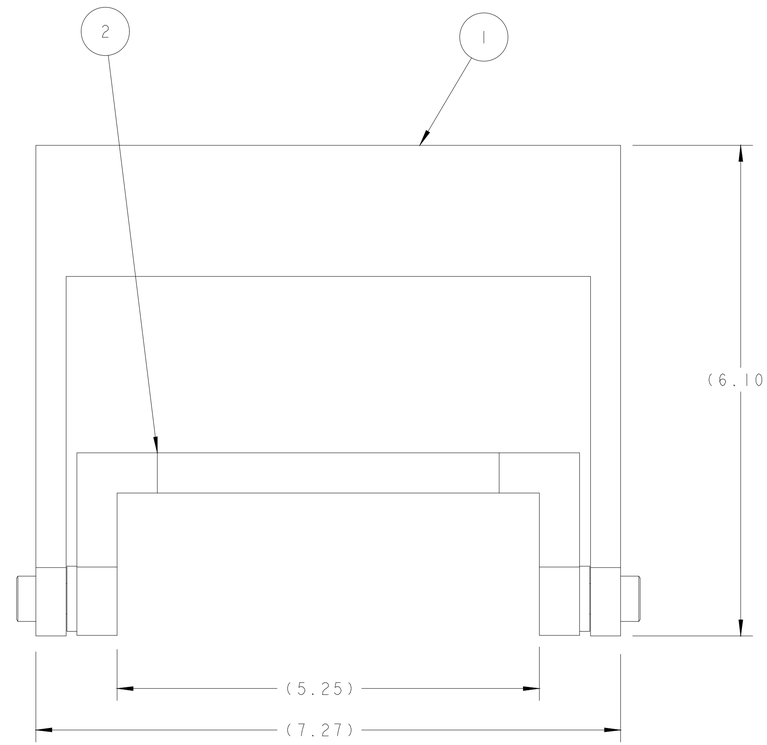

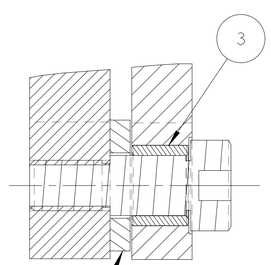

SEE NOTE 2

SECTION A-A
SCALE 2/1

ITEM	PART NO	REQD	DESCRIPTION	MATERIAL
5	PZ-39	2	SHOULDER SCREW	BERG CATALOG
4	98370A030	2	3/8 FLAT WASHER, 1/8" THK, MCMASTER-CARR OR EQUIV.	-
3	25B432	2	HINGE ASSEMBLY BEARING	VESPEL SP-3
2	25B431	1	INNER HINGE ASSEMBLY	304 SS
1	25B428	1	OUTER HINGE ASSEMBLY	304 SS

REV	DWG	CHK	ZONE	DATE	CHANGES
B	AZ			5/24/01	CHANGED SHOLDER SCREW SIZE FROM PZ-39 TO PZ-40
A	AZ			1/23/01	INITIAL RELEASE

UNLESS OTHERWISE SPECIFIED
PROJECTION:

TOLERANCES		
	X.X ± 0.1	FRAC. ± 1/64
	X.XX ± 0.03	Angles ± 1.0°
	X.XXX ± 0.010	FINISH 125/

DO NOT SCALE PRINT
THREADS ARE CLASS 2
CHAMFER ENDS OF ALL SCREW TREADS 30°
CUT ROUND, 1.5 THREAD RELIEF ON MACHINED THREADS
BREAK EDGES .016 MAX. ON MACHINED WORK
REMOVE BURRS, WELD SPLATTER & LOOSE SCALE
IN ACCORDANCE WITH ASME Y14.5M & B46.1

SHOP ORDERS
SER NO. -
ACCT NO. | NO. REQD | DATE ISSD -
DEL TO | DATE REQD -
SURFACE TREATMT -
IDENT METHOD TAG
PROJECT NUMBER na
PROJECT NAME N/A
DWG BY A ZACHOSZCZ | DATE 05-Jan-01
CHK BY None | DATE
APR BY None | DATE

ERNEST ORLANDO LAWRENCE
BERKELEY NATIONAL LABORATORY
UNIVERSITY OF CALIFORNIA - BERKELEY

SNS - FES MEBT
BEAM TRANSPORT SYSTEMS
CHOPPER BOX HINGE ASSEMBLY

MICROFILMED:
PATENT CLEAR:
DWG. TYPE: ASSEM
SHOWN ON: -
SCALE: 1/1
DO NOT SCALE PRINTS
SHEET 1 OF 1
DESIGN ACCT. NO.: -
CATEGORY CODE: FE3312
DWG. NO.: 25B4274
SIZE: A
REV.: A

Dwg. File: 25B427 Model File: 25B427

DWG. NO.	SIZE	REV.	SH.
25B4284		B	1

NOTES:

1. ULTRA-HIGH VACUUM CLEANING AND PACKING REQUIRED.

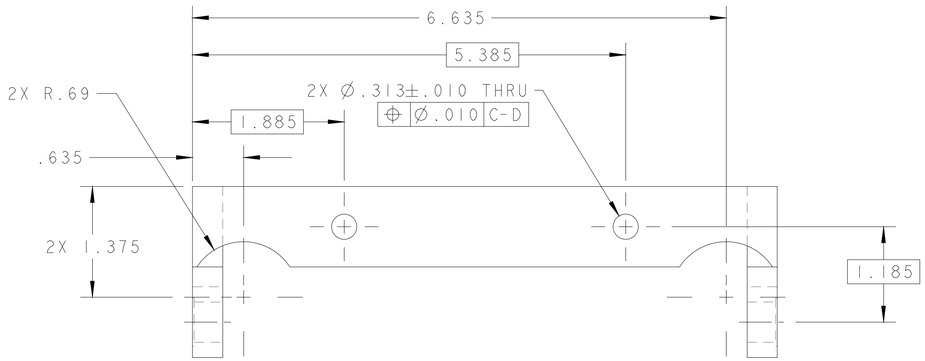

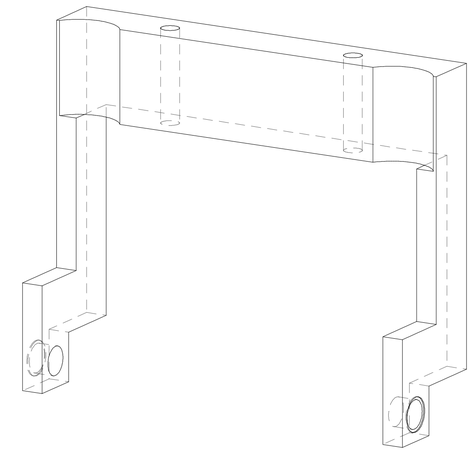

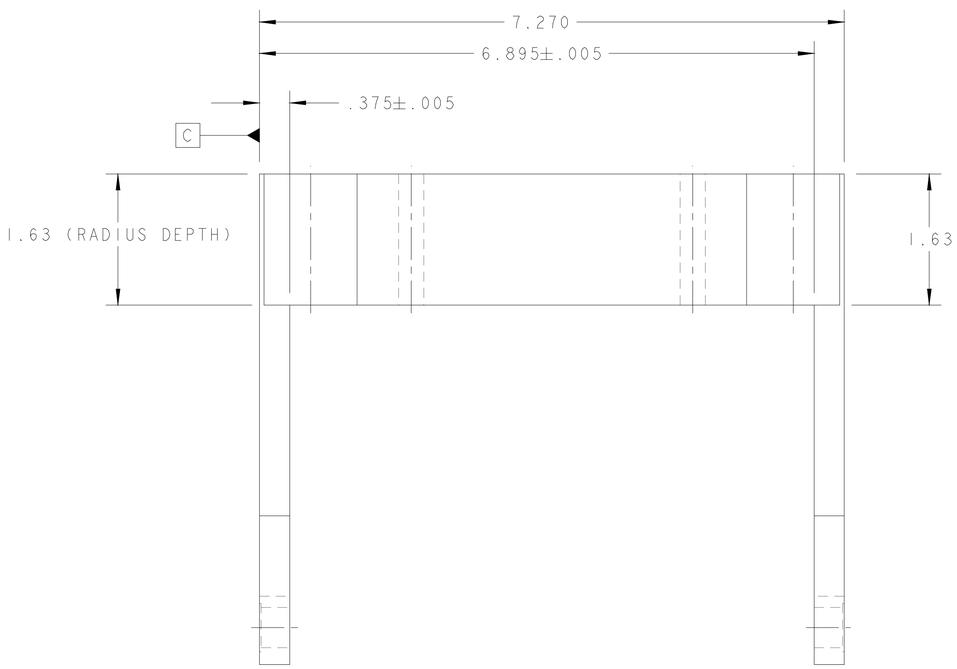

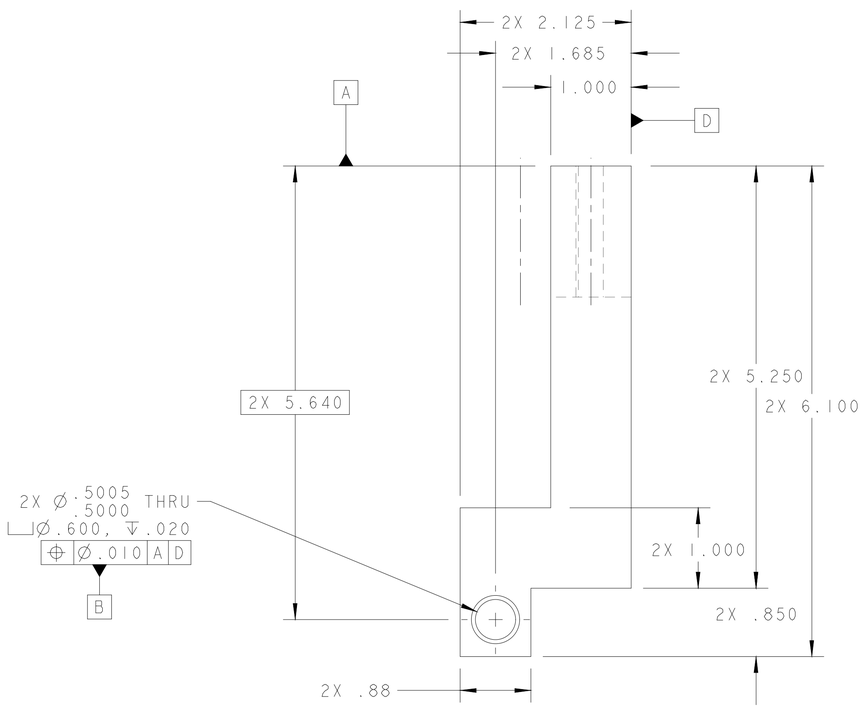

B	DPO			12/05/01	ADDED 2X R.69 RADII, REORIENTED ISO VIEW
A				1/23/01	INITIAL RELEASE
REV	DWG	CHK	ZONE	DATE	CHANGES

UNLESS OTHERWISE SPECIFIED

PROJECTION:

TOLERANCES

X.X ± 0.1	FRAC. ± 1/64
X.XX ± 0.03	Angles ± 10°
X.XXX ± 0.010	FINISH 125

DO NOT SCALE PRINT

THREADS ARE CLASS 2
CHAMFER ENDS OF ALL SCREW THREADS 30°
CUT ROUND, 15 THREAD RELIEF ON MACHINED THREADS
BREAK EDGES, .016 MAX. ON MACHINED WORK
REMOVE BURRS, WELD SPLATTER & LOOSE SCALE
IN ACCORDANCE WITH ASME Y14.5M & B461

2 1/4" PLATE	304 SS	-
DESCRIPTION	MATERIAL	MAT. LOCATION

SHOP ORDERS

ACCT NO.	NO. REQD	SER NO.	-
		DATE ISSD	-
DEL TO		DATE REQD	-
SURFACE TREATMIT	-		
IDENT METHOD	TAG		
PROJECT NUMBER	na		
PROJECT NAME	N/A		
DWG BY	A. ZACHOSZCZ	DATE	16-Jan-01
CHK BY	None	DATE	
APR BY	None	DATE	

ERNEST ORLANDO LAWRENCE
BERKELEY NATIONAL LABORATORY
UNIVERSITY OF CALIFORNIA - BERKELEY

SNS - FES MEBT
BEAM TRANSPORT SYSTEMS
OUTER HINGE ASSEMBLY

MICROFILMED:	DWG. TYPE	SHOWN ON	SCALE: 1/1	DO NOT SCALE PRINTS
	PART	-	SHEET 1 OF 1	
PATENT CLEAR:	DESIGN ACCT. NO.	CATEGORY CODE	DWG. NO.	SIZE / REV.
	-	FE3312	25B4284	B

Dwg. File: 25B4284, Model File: 25B4284

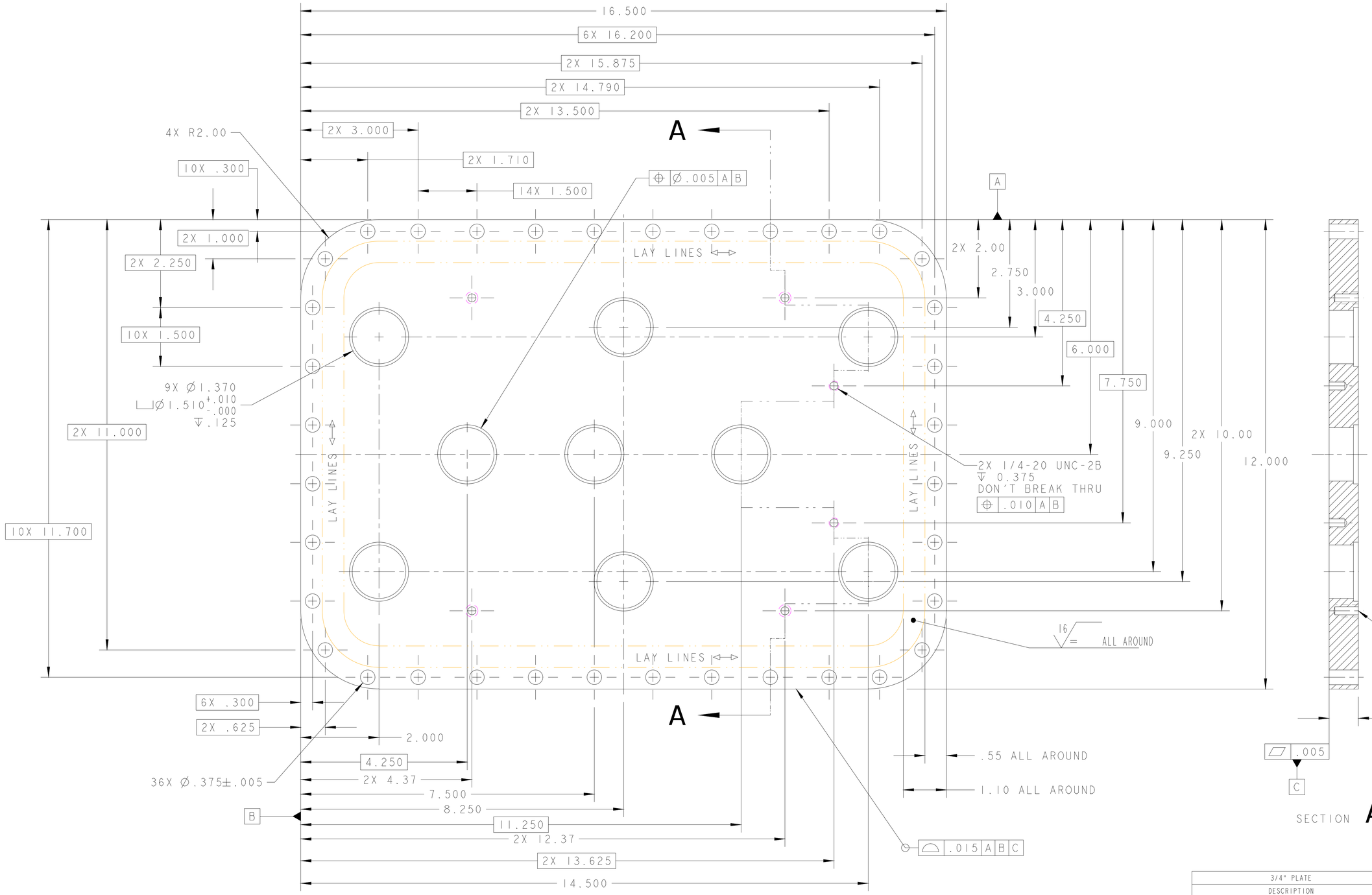

NOTES:

1. MINIMUM MATERIAL THICKNESS AFTER DRILLING .10".

REV	DWG	CHK	ZONE	DATE	CHANGES
E	DPO			7/18/01	MODIFIED COSMETIC ATTRIBUTES OF SOME DIMENSIONS
E					6X 16.200 WAS 2X 16.200, 10X 11.700 WAS 11.700
D	AZ			3/7/01	CORRECTED PLATE THICKNESS IN BOM FROM 1/2" TO 3/4" IN BOM
C	AZ			2/14/01	INCREASED THICKNESS FROM .500 TO .750,
C	AZ			2/14/01	ADDED 4X 1/4"-20 TAPPED HOLES)
B	AZ			1/23/01	UPDATED MODEL
A	AZ			1/10/01	INITIAL RELEASE

UNLESS OTHERWISE SPECIFIED
PROJECTION:
TOLERANCES: X.X ± 0.1 | FRAC. ± 1/64 | X.XX ± 0.03 | Angles ± 1.0° | X.XXX ± 0.010 | FINISH 125
DO NOT SCALE PRINT
THREADS ARE CLASS 2
CHAMFER ENDS OF ALL SCREW TREADS 30°
CUT ROUND, 1.5 THREAD RELIEF ON MACHINED THREADS
BREAK EDGES .016 MAX. ON MACHINED WORK
REMOVE BURRS, WELD SPLATTER & LOOSE SCALE
IN ACCORDANCE WITH ASME Y14.5M & B46.1

DESCRIPTION	MATERIAL	MAT. LOCATION
3/4" PLATE	304 SS	-

SHOP ORDERS

ACCT NO.	NO. REQD	SER NO.	-
DEL TO		DATE ISSD	-
		DATE REQD	-
SURFACE TREATMT	-		
IDENT METHOD	TAG		
PROJECT NUMBER	na		
PROJECT NAME	N/A		
DWG BY	A ZACHOSZCZ	DATE	11-Dec-00
CHK BY	None	DATE	
APR BY	None	DATE	

ERNEST ORLANDO LAWRENCE BERKELEY NATIONAL LABORATORY
UNIVERSITY OF CALIFORNIA - BERKELEY

SNS - FES MEBT
BEAM TRANSPORT SYSTEMS
CHOPPER BOX TOP PLATE

MICROFILMED:	DWG. TYPE	SHOWN ON	SCALE: 3/4	DO NOT SCALE PRINTS
	PART	25B426	SHEET 1 OF 1	
PATENT CLEAR:	DESIGN ACCT. NO.	CATEGORY CODE	DWG. NO.	SIZE / REV.
	-	FE3312	25B4294	E

Dwg. File: 25B429_Rev4 | File: 25B429

NOTES:

2. ULTRA-HIGH VACUUM CLEANING AND PACKING REQUIRED.

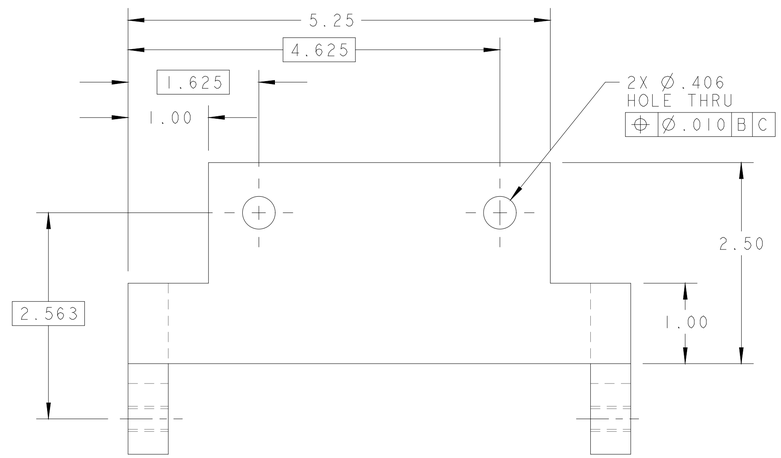

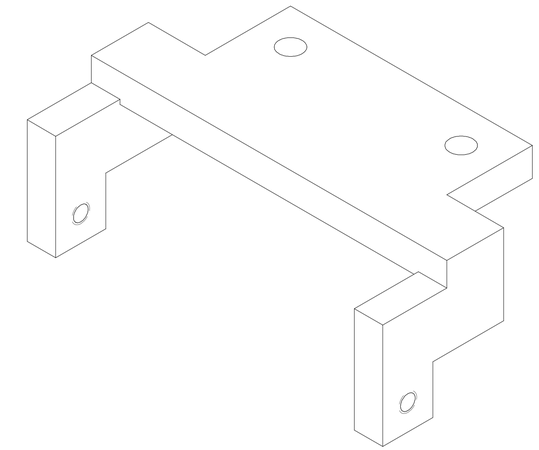

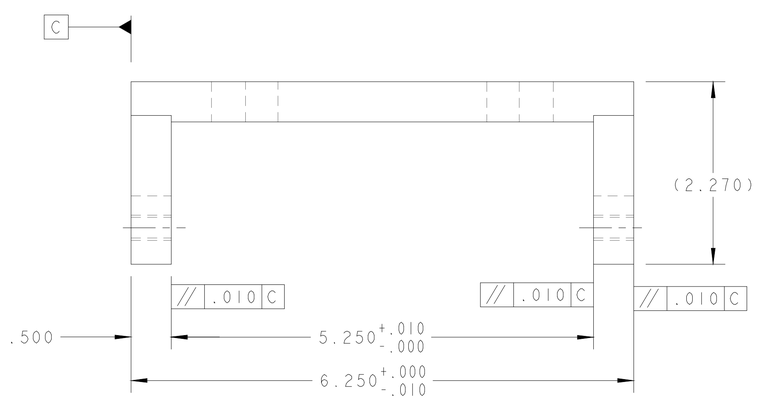

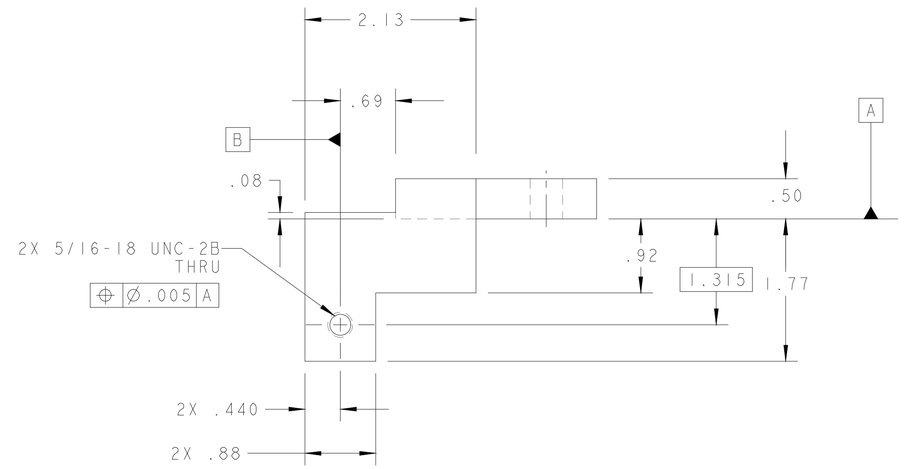

REV	DWG	CHK	ZONE	DATE	CHANGES
D	PL	DPO			Ø.406 HOLES WERE Ø.310
C			B3,4	4/16/01	1.00 DIMENSION WAS REPLACED WITH .92 AND .80
B				1/23/01	FIXED INTERFERENCE WITH CHOPPER PLATES
A				1/10/01	INITIAL RELEASE

UNLESS OTHERWISE SPECIFIED

PROJECTION: ⊕

TOLERANCES: X.X ± 0.1 | FRAC. ± 1/64 | X.XX ± 0.03 | Angles ± 10° | X.XXX ± 0.010 | FINISH 125

DO NOT SCALE PRINT

THREADS ARE CLASS 2
CHAMFER ENDS OF ALL SCREW TREADS 30°
CUT ROUND, 15 THREAD RELIEF ON MACHINED THREADS
BREAK EDGES .016 MAX. ON MACHINED WORK
REMOVE BURRS, WELD SPLATTER & LOOSE SCALE
IN ACCORDANCE WITH ASME Y14.5M & B461

DESCRIPTION	MATERIAL	MAT. LOCATION
2 1/2" PLATE	304 SS	-

SHOP ORDERS

ACCT NO.	NO. REQD	SER NO.	-
		DATE ISSD	-
DEL TO		DATE REQD	-
SURFACE TREATMT	-		
IDENT METHOD	TAG		
PROJECT NUMBER	na		
PROJECT NAME	N/A		
DWG BY	A. ZACHOSZCZ	DATE	16-Jan-01
CHK BY	None	DATE	
APR BY	None	DATE	

ERNEST ORLANDO LAWRENCE
BERKELEY NATIONAL LABORATORY
UNIVERSITY OF CALIFORNIA - BERKELEY

SNS - FES MEBT
BEAM TRANSPORT SYSTEMS
INNER HINGE ASSEMBLY

MICROFILMED:	DWG. TYPE	SHOWN ON	SCALE: 1/1	DO NOT SCALE PRINTS
	PART	-	SHEET 1 OF 1	
PATENT CLEAR:	DESIGN ACCT. NO.	CATEGORY CODE	DWG. NO.	SIZE	REV.
	-	FE3312	25B4314	D

Dwg. File: 25B4314 Model File: 25B4314

DWG. NO.	SIZE	REV.	SH.
25B4322		A	1

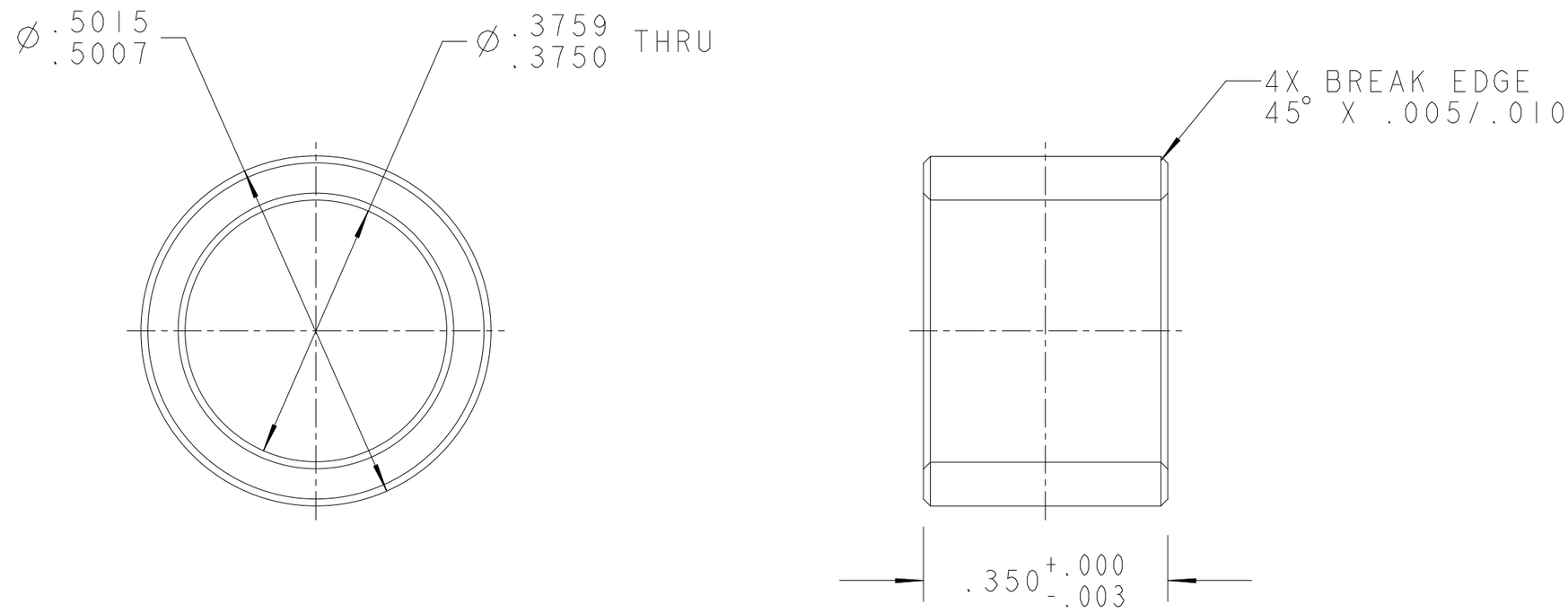

A				1/23/01	INITITAL RELEASE
REV	DWG	CHK	ZONE	DATE	CHANGES

UNLESS OTHERWISE SPECIFIED

PROJECTION:

TOLERANCES		
	X.X ± 0.1	FRAC. ± 1/64
	X.XX ± 0.03	Angles ± 1.0°
	X.XXX ± 0.010	FINISH 125

DO NOT SCALE PRINT

THREADS ARE CLASS 2
CHAMFER ENDS OF ALL SCREW TREADS 30°
CUT ROUND, 1.5 THREAD RELIEF ON MACHINED THREADS
BREAK EDGES .016 MAX. ON MACHINED WORK
REMOVE BURRS, WELD SPLATTER & LOOSE SCALE
IN ACCORDANCE WITH ASME Y14.5M & B46.1

.625 DIA BAR ROUND	VESPEL SP-3	-
DESCRIPTION	MATERIAL	MAT. LOCATION

SHOP ORDERS

SER NO.	-		
ACCT NO.		NO. REQD	
DATE ISSD	-		
DEL TO		DATE REQD	-
SURFACE TREATMT	-		
IDENT METHOD	TAG		
PROJECT NUMBER	na		
PROJECT NAME	N/A		
DWG BY	ANDREW ZACHOSZCZ	DATE	13-Feb-02
CHK BY	None	DATE	
APR BY	None	DATE	

ERNEST ORLANDO LAWRENCE BERKELEY NATIONAL LABORATORY
UNIVERSITY OF CALIFORNIA - BERKELEY

SNS - FES MEBT
BEAM TRANSPORT SYSTEMS
HINGE ASSEMBLY BEARING

MICROFILMED:	DWG. TYPE	SHOWN ON	SCALE: 5/1	DO NOT SCALE PRINTS
	PART	-	SHEET 1 OF 1	
PATENT CLEAR:	DESIGN ACCT. NO.	CATEGORY CODE	DWG. NO.	SIZE / REV.
	-	FE3312	25B4322	A

Rev. 1/29/2000 J. R. Osborn

Dwg. File: 25B432 Model File: 25B432

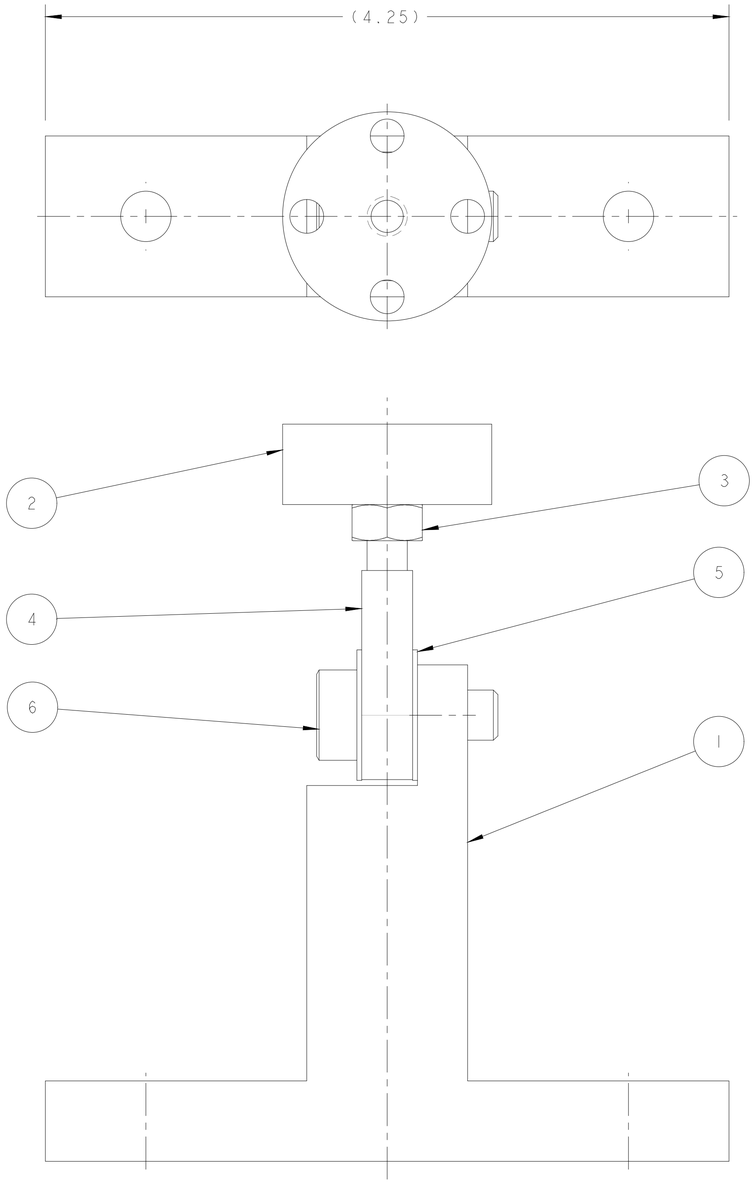

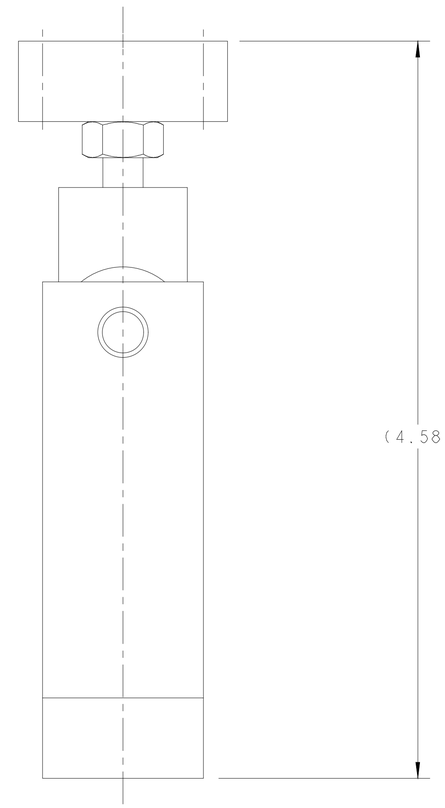

ITEM	PART NO	REQD	DESCRIPTION	MATERIAL
6	PZ-40	1	SHOULDER SCREW, PZ-39	BERG CATALOG
5	98370A030	2	3/8 FLAT WASHER, 1/8" THK, MCMASTER-CARR OR EQUIV.	-
4	25B446	1	ROD END	304 SS
3	-	1	1/4-20 UNC HEX. HD. NUT	18-8 SS
2	25B435	1	MICROMETER INTERFACE FLANGE	304 SS
1	25B434	1	CHOPPER BALL JOINT BRACKET	304 SS

NOTES:

1. ULTRA-HIGH VACUUM CLEANING AND PACKING REQUIRED.
2. ASSEMBLE IN CLEAN ENVIRONMENT.
   AFTER ASSEMBLY, WRAP TO MAINTAIN CLEANLINESS.

REV	DWG	CHK	ZONE	DATE	CHANGES
B	AZ	DO		7/18/01	ITEM 4 ROD END WAS REDESIGNED
A	AZ	DO		1/16/01	INITIAL RELEASE

UNLESS OTHERWISE SPECIFIED
PROJECTION:
TOLERANCES: X.X ± 0.1 | FRAC. ± 1/64 | X.XX ± 0.03 | Angles ± 1.0° | X.XXX ± 0.010 | FINISH 125
DO NOT SCALE PRINT
THREADS ARE CLASS 2
CHAMFER ENDS OF ALL SCREW TREADS 30°
CUT ROUND, 1.5 THREAD RELIEF ON MACHINED THREADS
BREAK EDGES .016 MAX. ON MACHINED WORK
REMOVE BURRS, WELD SPLATTER & LOOSE SCALE
IN ACCORDANCE WITH ASME Y14.5M & B46.1

SHOP ORDERS
ACCT NO. | NO. REQD | SER NO. - | DATE ISSD - | DEL TO | DATE REQD -
SURFACE TREATMT -
IDENT METHOD TAG
PROJECT NUMBER na
PROJECT NAME N/A
DWG BY A. ZACHOSZCZ | DATE 18-Jan-01
CHK BY None | DATE
APR BY None | DATE

ERNEST ORLANDO LAWRENCE BERKELEY NATIONAL LABORATORY
UNIVERSITY OF CALIFORNIA - BERKELEY

SNS - FES MEBT
BEAM TRANSPORT SYSTEMS
CHOPPER BALL JOINT ASSEMBLY

MICROFILMED: | PATENT CLEAR:
DWG. TYPE: ASSEM | SHOWN ON: - | SCALE: 2/1 | DO NOT SCALE PRINTS
SHEET 1 OF 1
DESIGN ACCT. NO.: - | CATEGORY CODE: FE3312 | DWG. NO.: 25B4334 | SIZE: B | REV.:

NOTES:

1. ULTRA-HIGH VACUUM CLEANING AND PACKING REQUIRED.

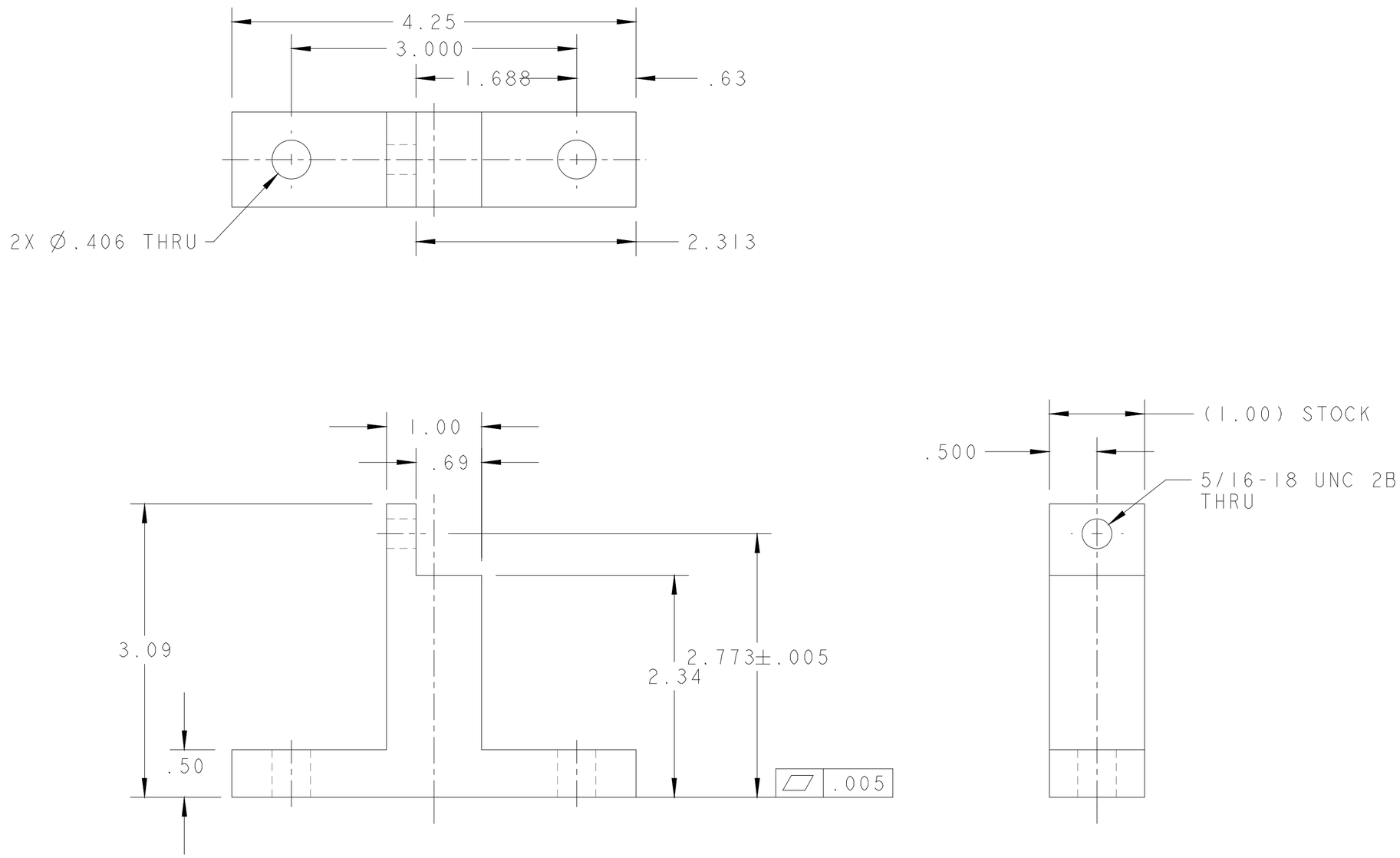

B	PL	DPO		2/19/02	2X Ø.406 HOLES WERE Ø.313
A				1/20/01	INITIAL RELEASE
REV	DWG	CHK	ZONE	DATE	CHANGES

UNLESS OTHERWISE SPECIFIED
PROJECTION:

TOLERANCES		
	X.X ± 0.1	FRAC. ± 1/64
	X.XX ± 0.03	Angles ± 1.0°
	X.XXX ± 0.010	FINISH 125

DO NOT SCALE PRINT
THREADS ARE CLASS 2
CHAMFER ENDS OF ALL SCREW TREADS 30°
CUT ROUND, 1.5 THREAD RELIEF ON MACHINED THREADS
BREAK EDGES .016 MAX. ON MACHINED WORK
REMOVE BURRS, WELD SPLATTER & LOOSE SCALE
IN ACCORDANCE WITH ASME Y14.5M & B46.1

DESCRIPTION	MATERIAL	MAT. LOCATION
1" PLATE	304 SS	-

SHOP ORDERS
SER NO. -
ACCT NO. | NO. REQD | DATE ISSD -
DEL TO | DATE REQD -
SURFACE TREATMT -
IDENT METHOD TAG
PROJECT NUMBER na
PROJECT NAME N/A
DWG BY A. ZACHOSZCZ | DATE 13-Feb-02
CHK BY None | DATE
APR BY None | DATE

ERNEST ORLANDO LAWRENCE BERKELEY NATIONAL LABORATORY
UNIVERSITY OF CALIFORNIA - BERKELEY

SNS - FES MEBT
BEAM TRANSPORT SYSTEMS
CHOPPER BALL JOINT BRACKET

MICROFILMED:	DWG. TYPE	SHOWN ON	SCALE: 1/1	DO NOT SCALE PRINTS
	PART	-	SHEET 1 OF 1	
PATENT CLEAR:	DESIGN ACCT. NO.	CATEGORY CODE	DWG. NO. 25B4343	SIZE B
	-	FE33212		

DWG. NO. 25B4343 SIZE B REV. SH. 1

Rev. 1/29/2000 J. R. Osborn

Dwg. File: 25B434 Model File: 25B434

NOTES:

1. ULTRA-HIGH VACUUM CLEANING AND PACKING REQUIRED.}

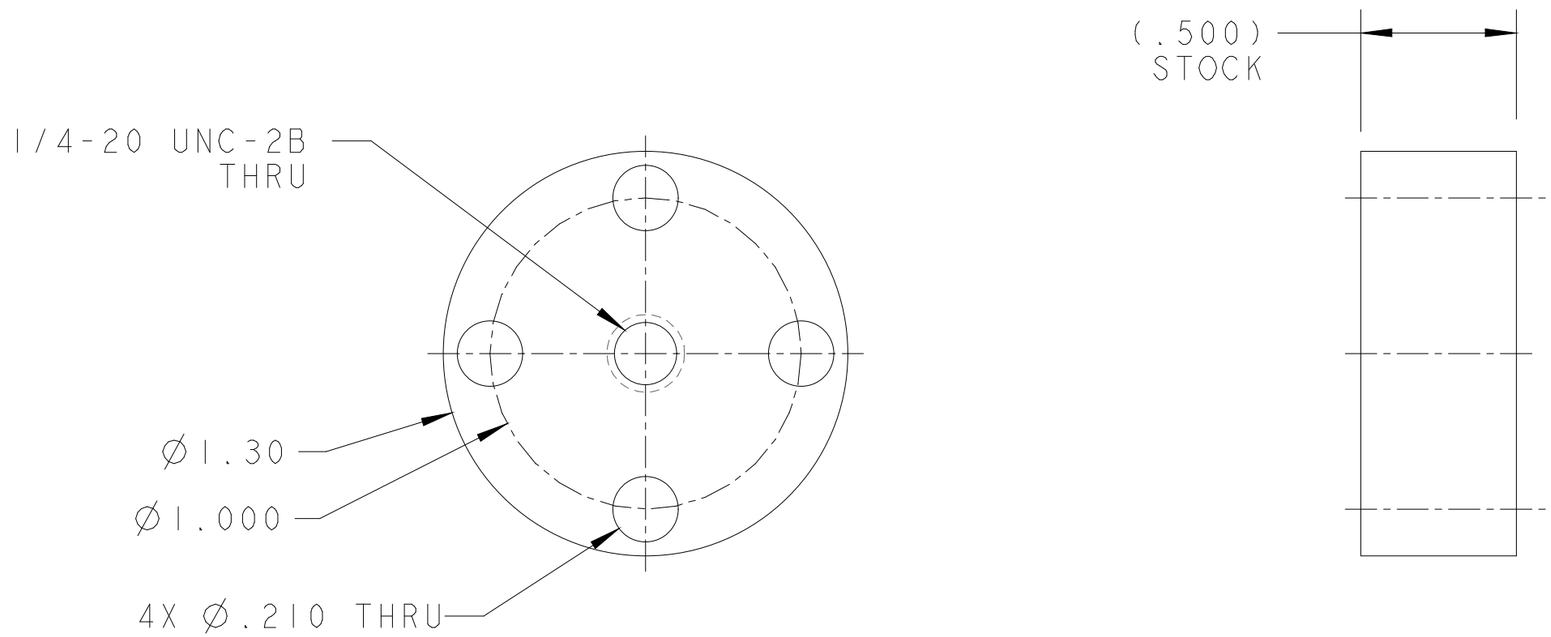

A				1/20/01	INITIAL RELEASE
REV	DWG	CHK	ZONE	DATE	CHANGES

UNLESS OTHERWISE SPECIFIED

PROJECTION:

TOLERANCES		
	X.X ± 0.1	FRAC. ± 1/64
	X.XX ± 0.03	Angles ± 1.0°
	X.XXX ± 0.010	FINISH 125

DO NOT SCALE PRINT

THREADS ARE CLASS 2
CHAMFER ENDS OF ALL SCREW TREADS 30°
CUT ROUND, 1.5 THREAD RELIEF ON MACHINED THREADS
BREAK EDGES .016 MAX. ON MACHINED WORK
REMOVE BURRS, WELD SPLATTER & LOOSE SCALE
IN ACCORDANCE WITH ASME Y14.5M & B46.1

1/2" PLATE	304 SS	-
DESCRIPTION	MATERIAL	MAT. LOCATION

SHOP ORDERS

SER NO.	-		
ACCT NO.		NO. REQD	DATE ISSD -
DEL TO			DATE REQD -
SURFACE TREATMT	-		
IDENT METHOD	TAG		
PROJECT NUMBER	na		
PROJECT NAME	N/A		
DWG BY	A. ZACHOSZCZ	DATE	18-Jan-01
CHK BY	None	DATE	
APR BY	None	DATE	

ERNEST ORLANDO LAWRENCE BERKELEY NATIONAL LABORATORY
UNIVERSITY OF CALIFORNIA - BERKELEY

SNS - FES MEBT
BEAM TRANSPORT SYSTEMS
MICROMETER INTERFACE FLANGE

MICROFILMED:	DWG. TYPE	SHOWN ON	SCALE: 2/1	DO NOT SCALE PRINTS
	PART	-	SHEET 1 OF 1	
PATENT CLEAR:	DESIGN ACCT. NO.	CATEGORY CODE	DWG. NO.	SIZE / REV.
	-	FE3312	25B4352	A

Rev. 1/29/2008 J. R. Osborn

Dwg. File: 25B435 Model File: 25B435

DWG. NO.	SIZE	REV.	SH.
25B4462		A	1

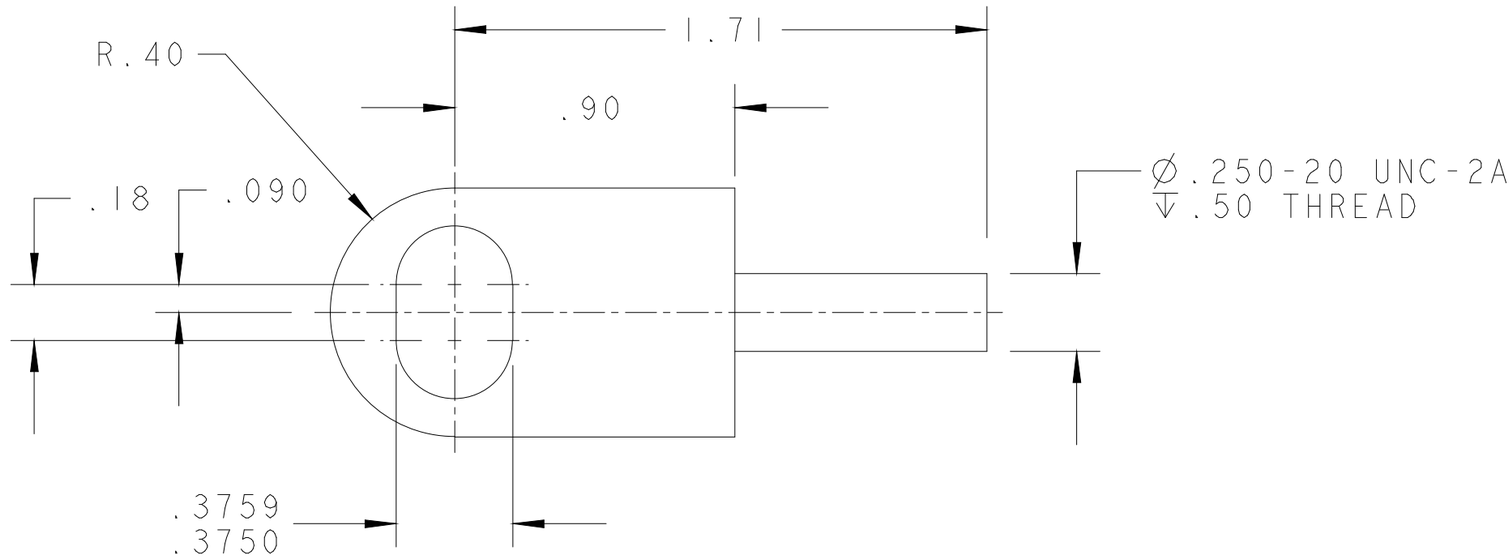

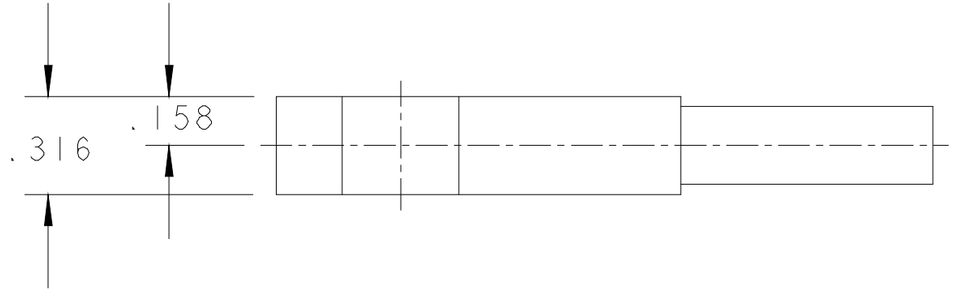

3/8" PLATE	304 SS	-
DESCRIPTION	MATERIAL	MAT. LOCATION

REV	DWG	CHK	ZONE	DATE	CHANGES
A	AZ			5/25/01	INITIAL RELEASE

UNLESS OTHERWISE SPECIFIED

PROJECTION:

TOLERANCES		
	X.X ± 0.1	FRAC. ± 1/64
	X.XX ± 0.03	Angles ± 1.0°
	X.XXX ± 0.010	FINISH 125

DO NOT SCALE PRINT

THREADS ARE CLASS 2
CHAMFER ENDS OF ALL SCREW TREADS 30°
CUT ROUND, 1.5 THREAD RELIEF ON MACHINED THREADS
BREAK EDGES .016 MAX. ON MACHINED WORK
REMOVE BURRS, WELD SPLATTER & LOOSE SCALE
IN ACCORDANCE WITH ASME Y14.5M & B46.1

SHOP ORDERS

SER NO.	-		
ACCT NO.		NO. REQD	DATE ISSD -
DEL TO			DATE REQD -
SURFACE TREATMT	-		
IDENT METHOD	TAG		
PROJECT NUMBER	na		
PROJECT NAME	N/A		
DWG BY	Andrew Zachoszcz	DATE	24-May-01
CHK BY	Daryl Oshatz	DATE	
APR BY	Daryl Oshatz	DATE	

ERNEST ORLANDO LAWRENCE BERKELEY NATIONAL LABORATORY
UNIVERSITY OF CALIFORNIA - BERKELEY

SNS - FES MEBT
BEAM TRANSPORT SYSTEMS
ROD END

MICROFILMED:	DWG. TYPE	SHOWN ON	SCALE: 2/1	DO NOT SCALE PRINTS
	PART	-	SHEET 1 OF 1	
PATENT CLEAR:	DESIGN ACCT. NO.	CATEGORY CODE	DWG. NO.	SIZE / REV.
	-	FE3312	25B4462	A

Rev. 1/29/2000 J. R. Osborn

Dwg. File: 25B446 Model File: 25B446

Author **Andrew S Zachoszcz**

Department **Mechanical Engineering**

Date **7/5/01**

APPENDIX B

CAD Images and photographs of Chopper Beambox

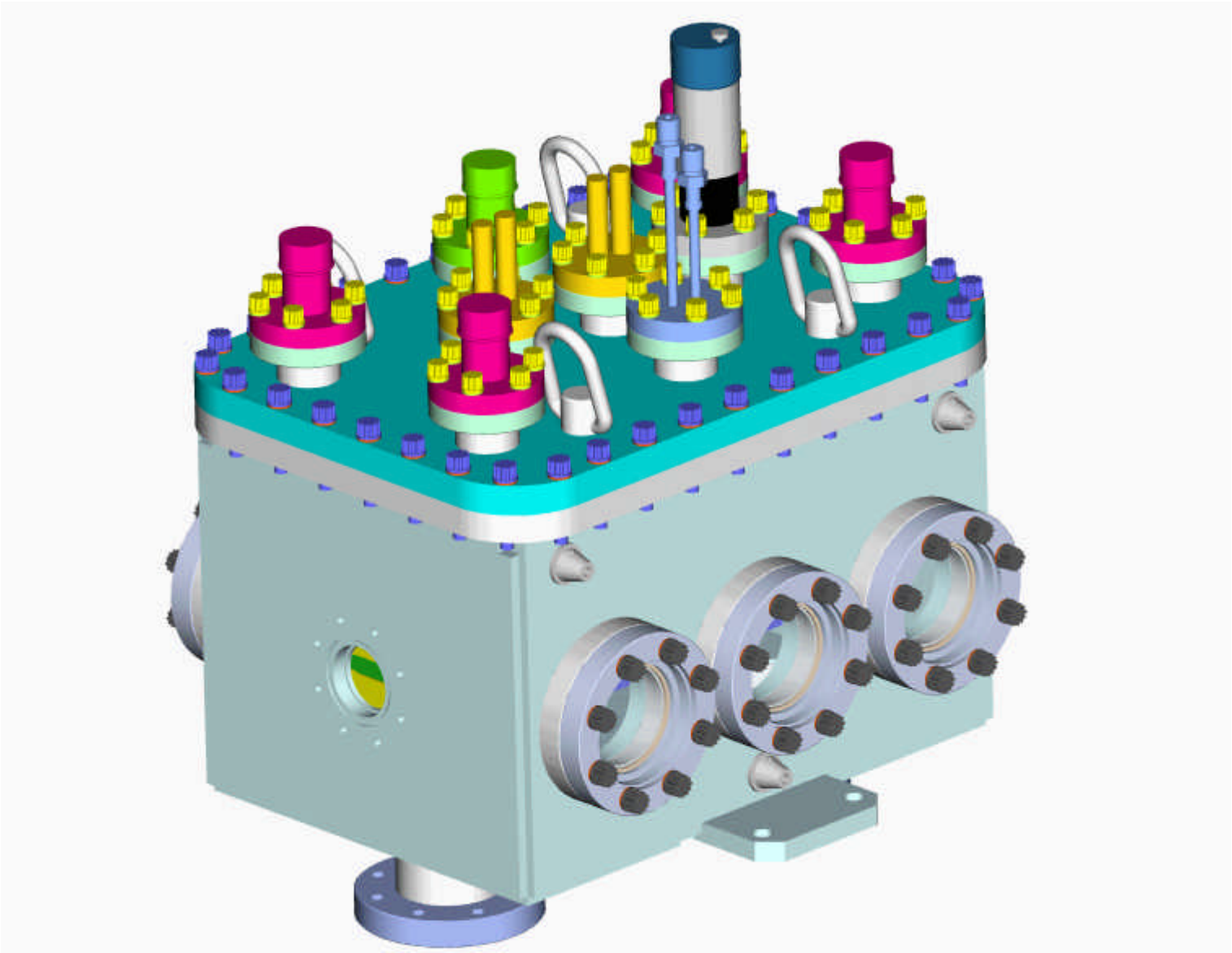

CHOPPER BEAMBOX ASSEMBLY

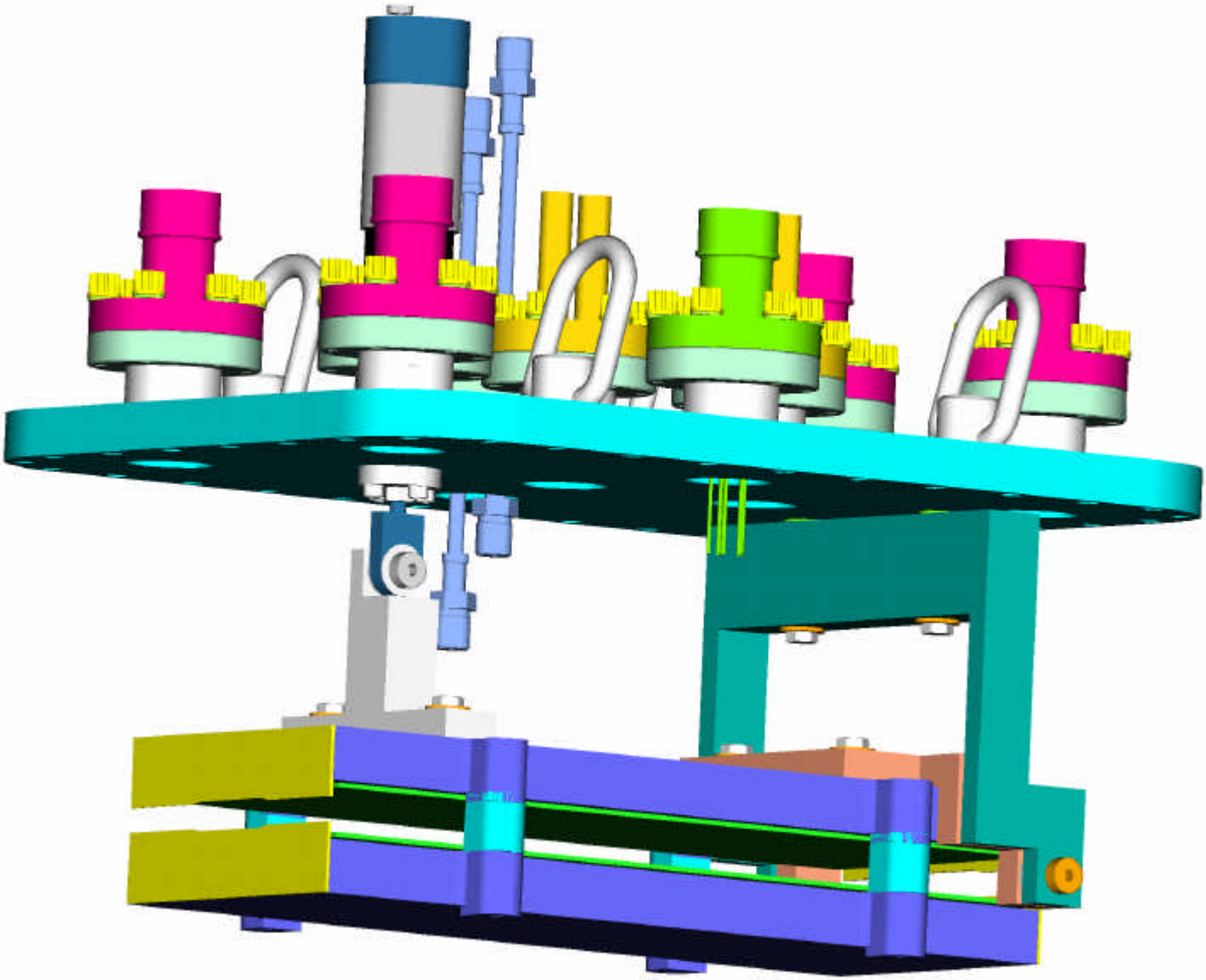

CHOPPER BEAMBOX SUSPENSION SYSTEM

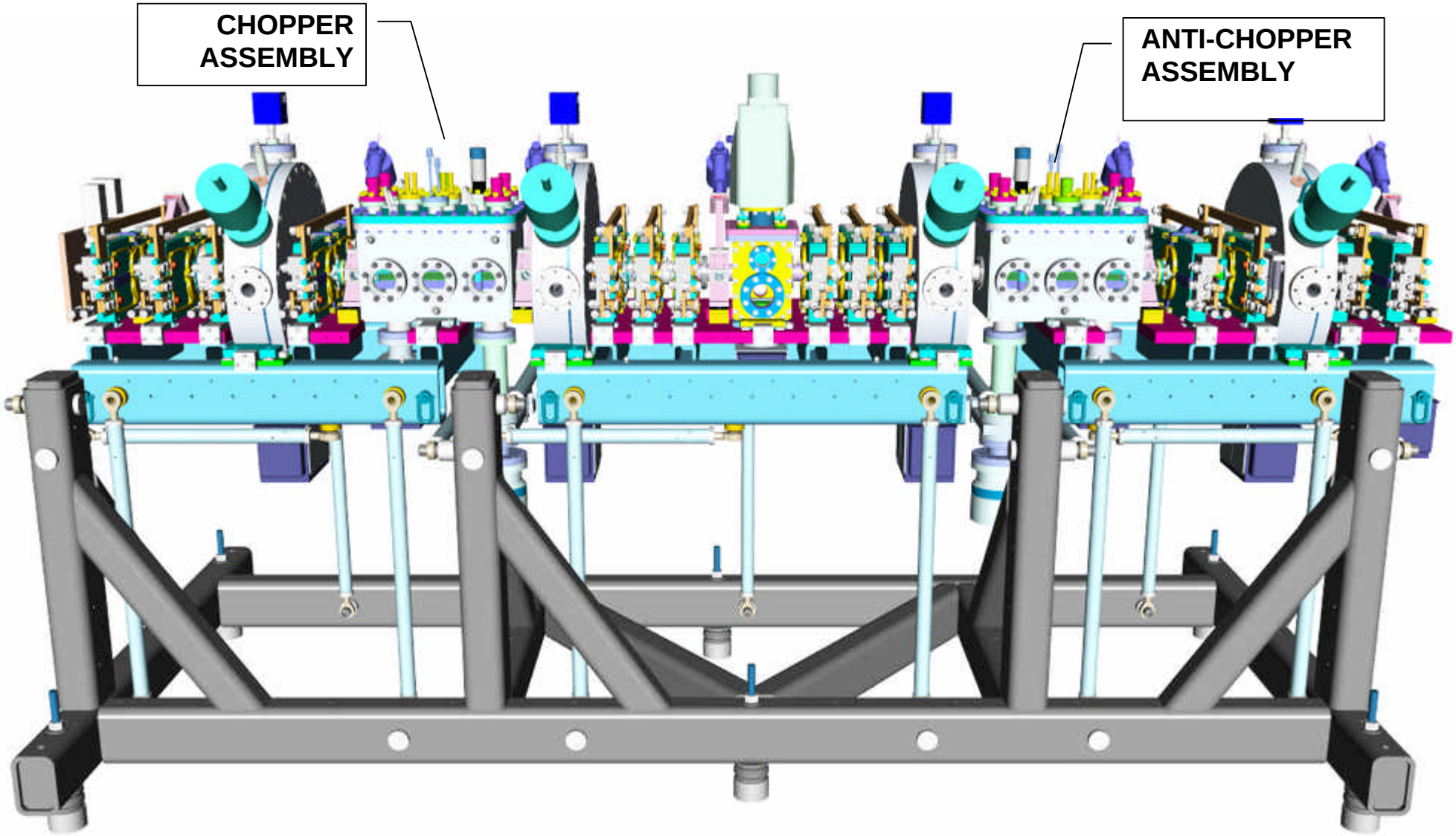

CHOPPER AND ANTI-CHOPPER LOCATIONS IN MEBT

CHOPPER BOX WELDMENT

CHOPPER BOX WELDMENT

CHOPPER BOX LEAK TEST PREPARATION

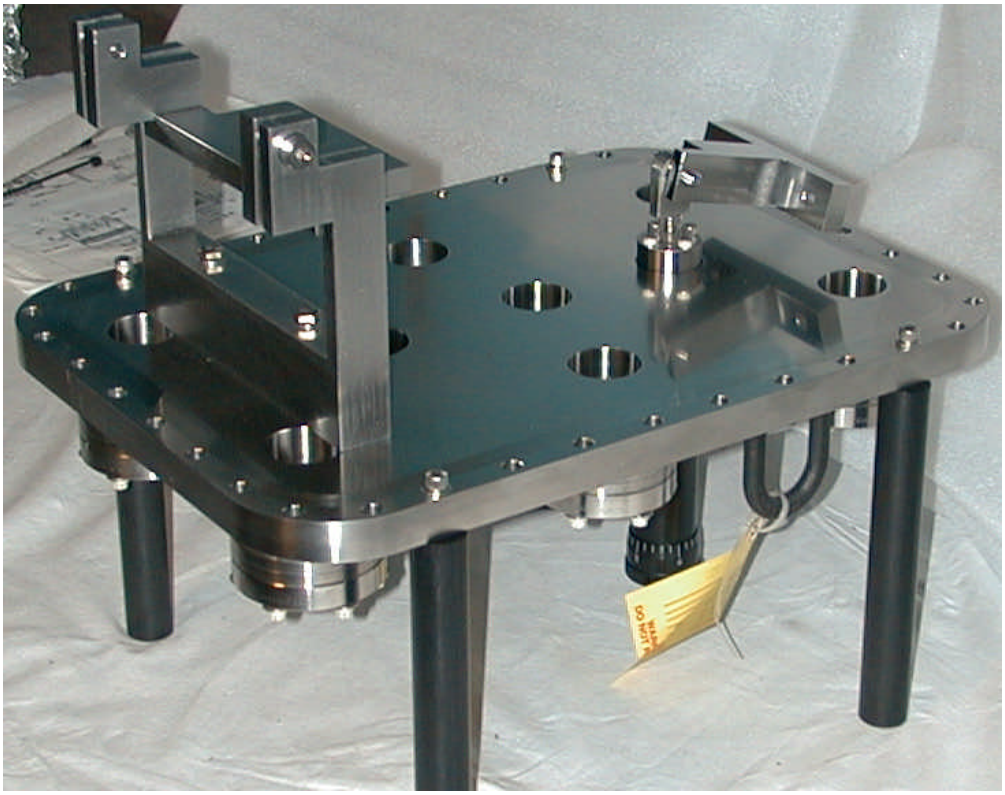

CHOPPER BOX COVER ASSEMBLY

APPENDIX C

Calculations

Author
Andrew S Zachoszcz, Daryl Oshatz

Department
Mechanical Engineering

Date
8/22/01

1 Cover plate deflection under due to atmospheric pressure variations

Atmospheric pressure variations can cause distortions of vacuum beamboxes when large surfaces areas are exposed to the atmosphere on one side and vacuum on the other. Because movement of the Chopper Structures could affect the beam being transported through the MEBT, the total amount of deflection caused by vacuum loading was determined. Only a fraction of the total deflection caused by vacuum loading would translate into movement of the Chopper structures inside the beamboxes during variations in barometric pressure. For example, during storms barometric pressure can easily vary by as much as ten percent.

1.1 Spreadsheet calculation using Roark's formula for rectangular plate deflection

1.1.1 Scope

The Chopper plates are suspended from the cover plate of the Chopper beambox. Physics considerations require that the position of the Chopper Structures vary by no more than ten percent of the sigma of the beam. With sigma roughly equal to 2 mm, this requirement translates into an alignment goal of 0.2 mm or 0.079 inches. These analytic calculations are based on Roark's formula for a flat rectangular plate of constant thickness.

Cover edges simply supported

Maximum stress

Max s[lb/in^2]=	b***q*b^2/t^2=**	**1186.4533**	lb/in^2*in^2/in^2=lb/in^2

q[psi]=	14.7	
a[in]=	14.5	longer side of cover at the support edge
b[in]=	10	shorter side of cover at the support edge
t[in]=	0.75	
a/b=	1.45	
β=	0.454	[1] page 458

Maximum deflection

Max y [in]=	a***q*b^4/E/t^3=**	**-0.00097**

α[–]=	0.078	[1]
E[lb/in^2]=	2.80E+07	

Cover edges fixed

Maximum stress

Max s[lb/in^2]=	b1***q*b^2/t^2=**	**1139.4133**	at center of long edge	[1] page 458
Max s[lb/in^2]=	b2***q*b^2/t^2=**	**546.18667**	at center	[1] page 458

Maximum deflection

Max y [in]=	a***q*b^4/E/t^3=**	**-0.00029**

β1=	0.436	[1] page 458
β2=	0.209	[1] page 458
α[–]=	0.023	[1] page 458

1.2 FEA Analysis

A finite element analysis of the cover plate was performed using ANSYS, version 5.6. The model utilized quarter-symmetry. The contour plots that follow show deflection values in inches.

1.2.1 Edges Simply Supported

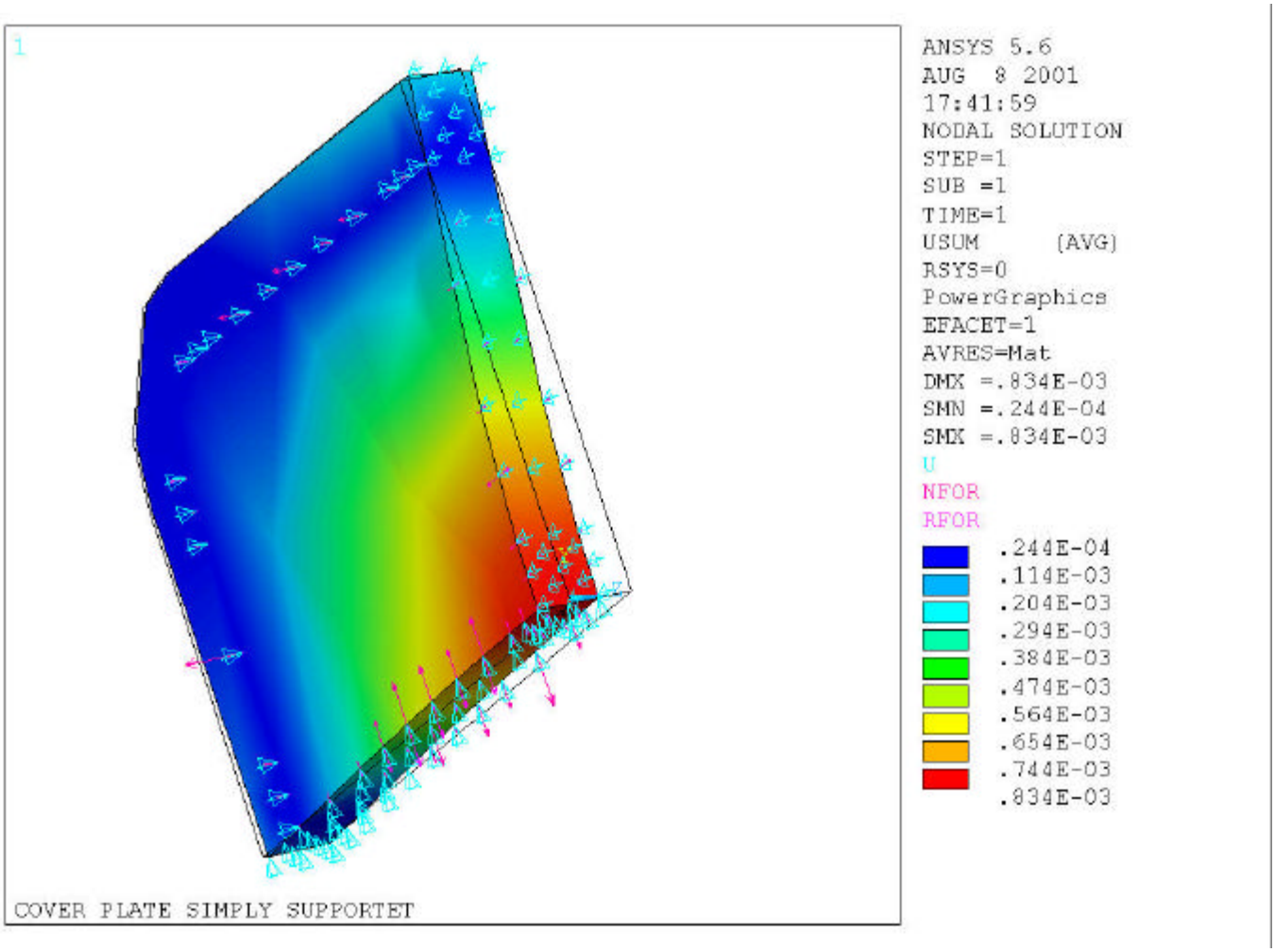

Lawrence Berkeley National Laboratory - University of California

ENGINEERING NOTE

Cat. Code **FE3313** Serial # **M7984**

Author **Andrew S Zachoszcz, Daryl Oshatz**

Department **Mechanical Engineering** Date **8/22/01**

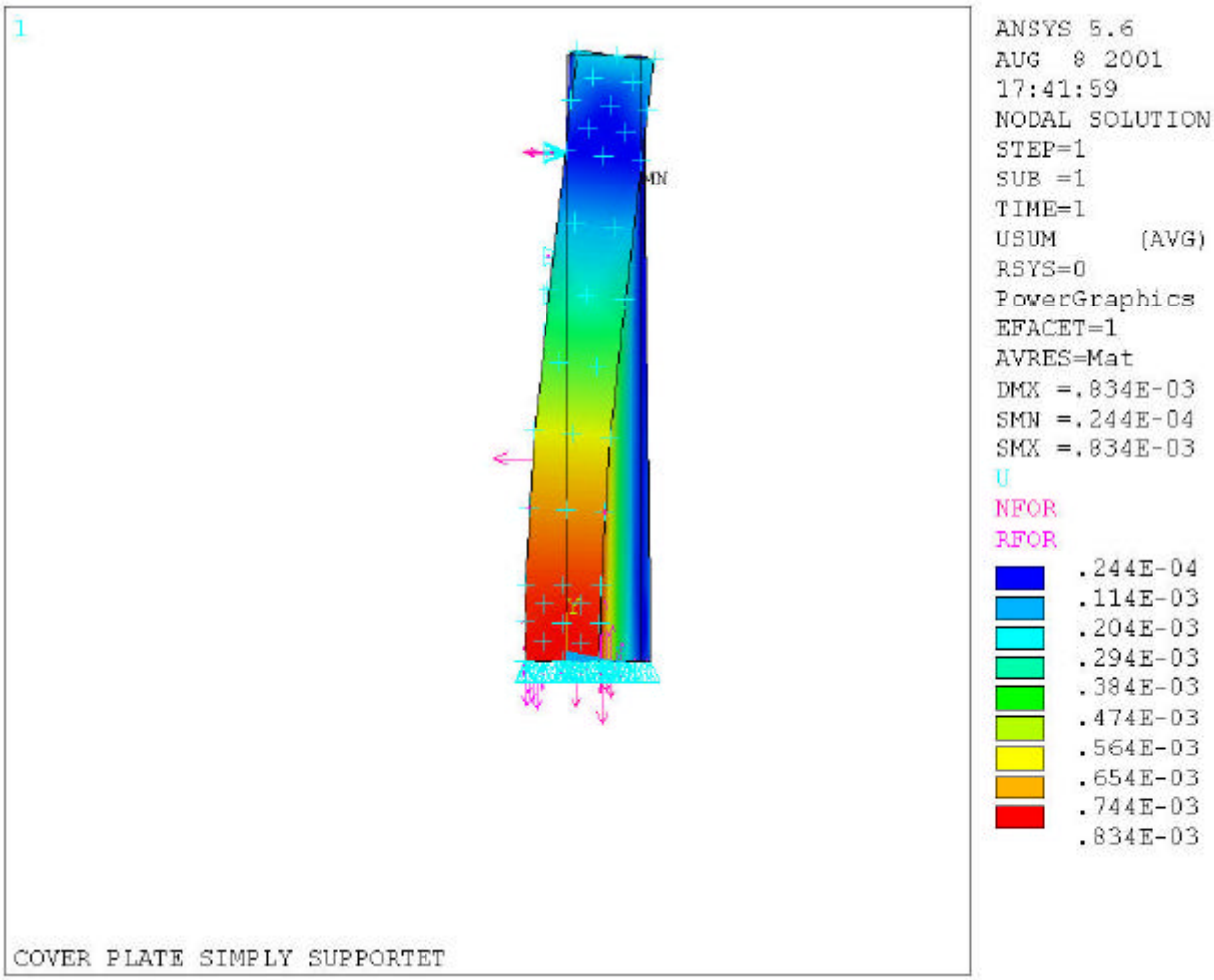

1.2.2 Edges Fixed

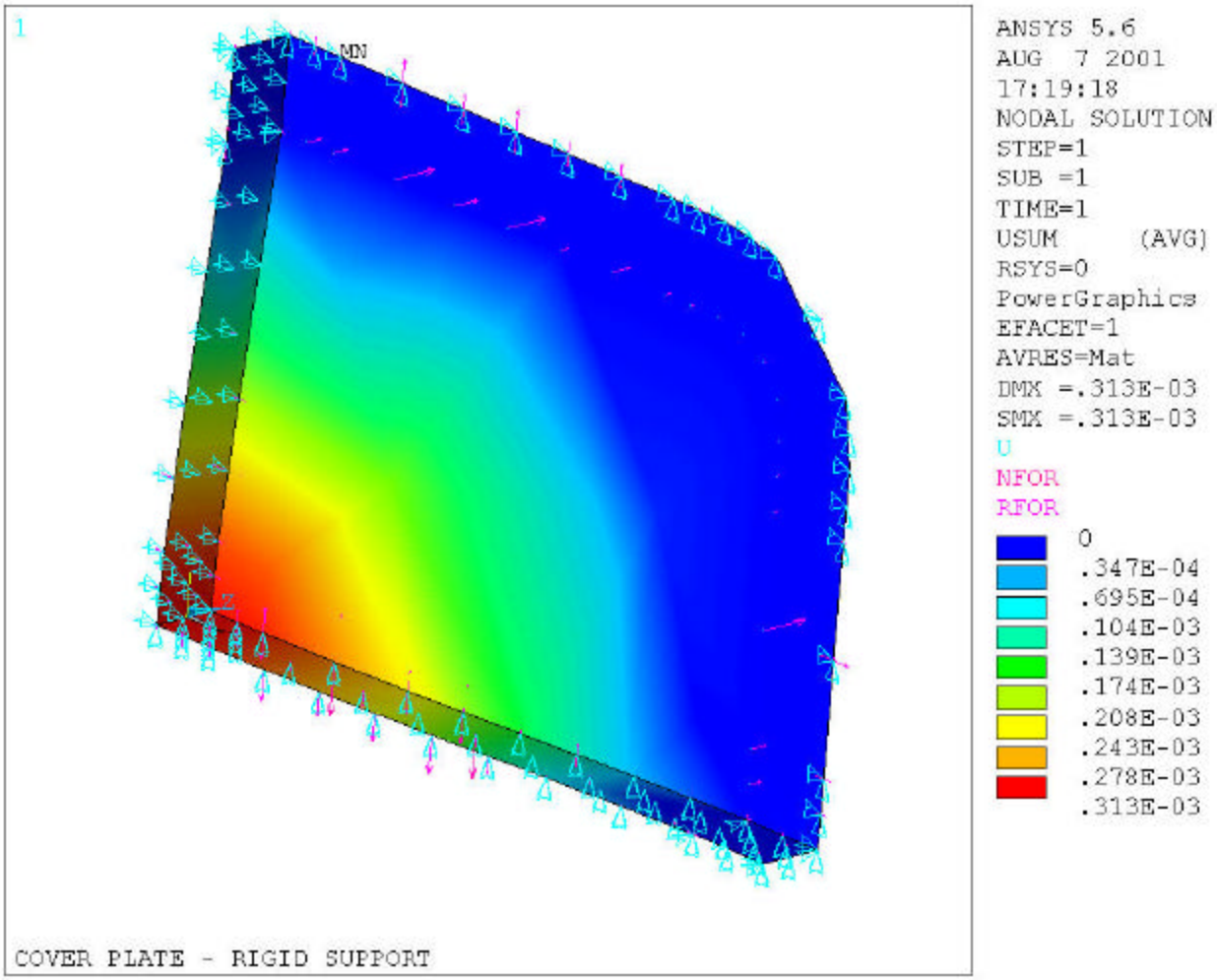

Lawrence Berkeley National Laboratory - University of California

ENGINEERING NOTE

Cat. Code **FE3313** Serial # **M7984**

Author **Andrew S Zachoszcz, Daryl Oshatz**

Department **Mechanical Engineering**

Date **8/22/01**

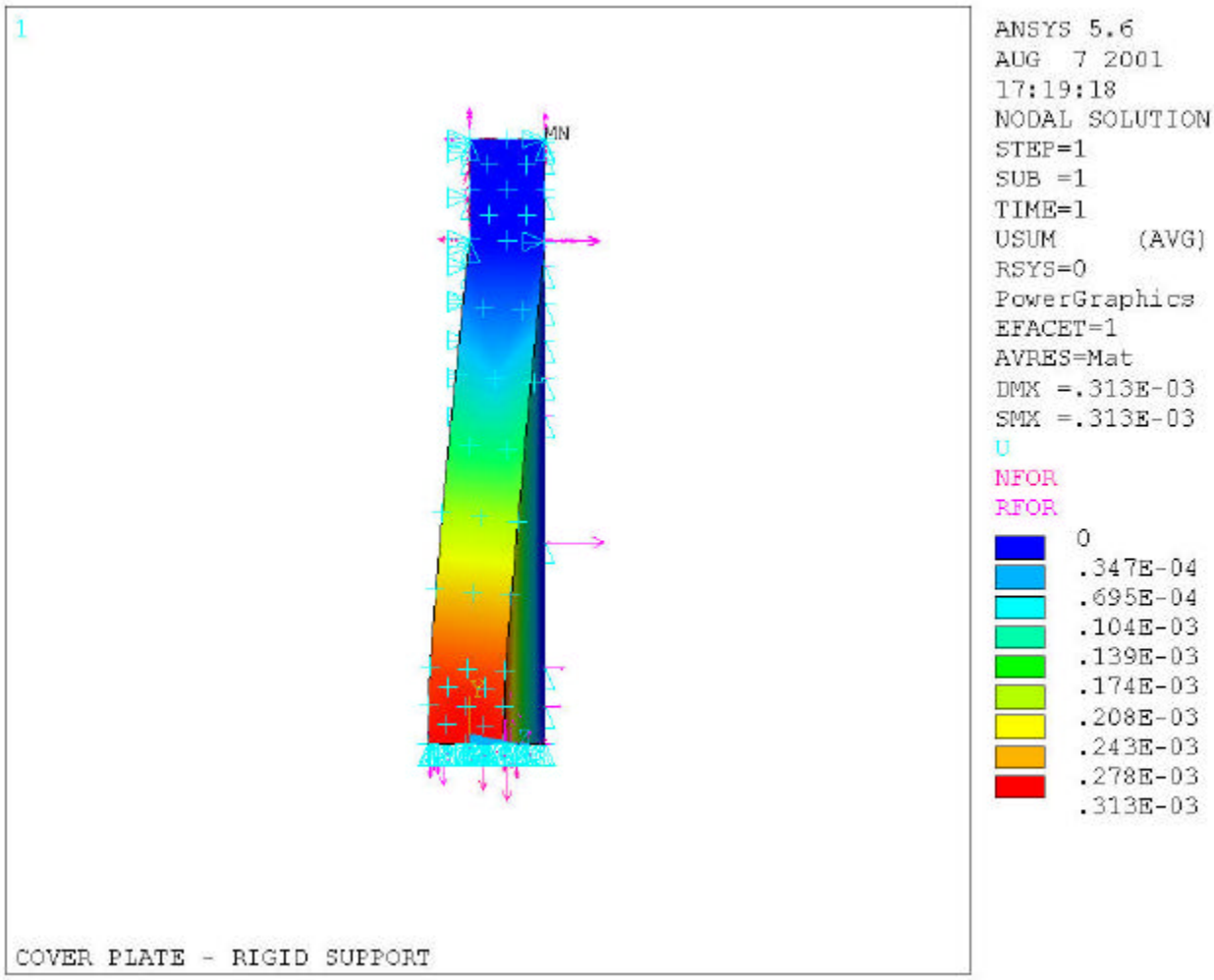

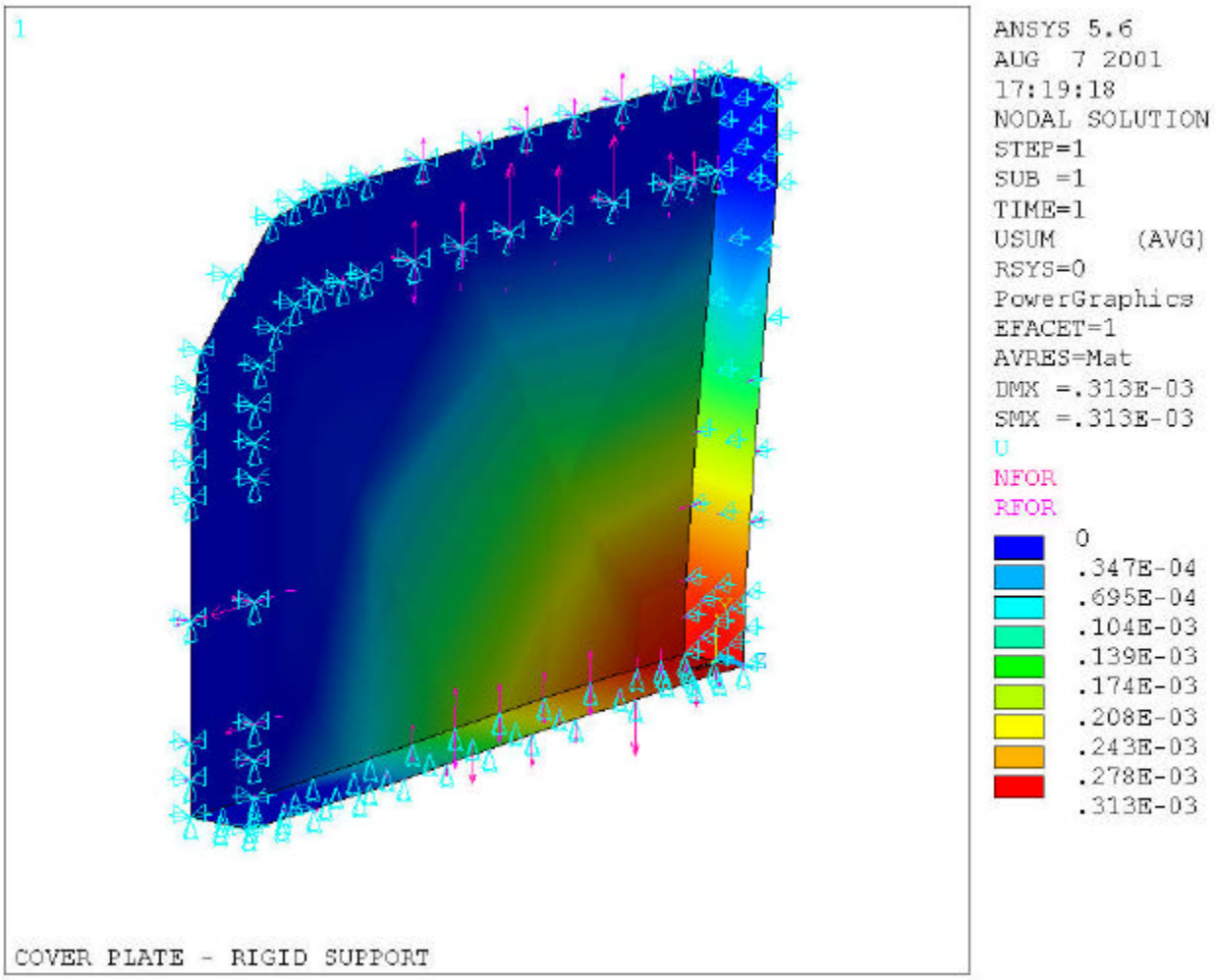

The maximum deflection of a plate with fixed edges is .00031”

1.3 Conclusions

The most conservative solution, that with simply supported edges, provides an upper bound for the amount of deflection anticipated for the cover plate due to atmospheric pressure variations. The deflections predicted by the FEA solution are smaller than those predicted by the analytic solution due to the rounded corner of the plate in the FEA model. The results indicate that the areas of the cover plate where the suspension bracket would attach would deflect 0.00025” with one atmosphere of external pressure. Extreme barometric pressure variations due to storm activity are likely to move the cover plate approximately ten percent of this amount. This movement is entirely negligible given the physics requirements.

2 Natural frequencies for the chopper support

2.1 Scope

Because of the possibility of accelerations during shipping and seismic events, the natural frequency of vibration in the vertical direction is calculated. The Chopper Assemblies are supported on 4" by ½" thick tabs extending from either side of the bottom plate of the beambox weldment [2]. Roark's formulas [1] were used for the calculation. Two cases were analyzed:

Simply supported beam

[1] page 714 **f=6.93/2PI*(E*I*g/W/L^3)^(1/2) = 19.53 Hz Natural frequency**

	E [psi]=	2.90E+07	steel
	I [in^4]=	0.041667	4x0.5 plate
	g [in/sec^2]	386.1	
	W[lb]=	400.00	weight
[2]	L[in]=	15.5	span

Fixed support
Span reduced by width of the box

[1] page 714 **f=13.86/2PI*(E*I*g/W/L^3)^(1/2) = 184.79 Hz Natural frequency**

	E [psi]=	2.90E+07	steel
	I [in^4]=	0.041667	4x0.5 plate
	g [in/sec^2]	386.1	
	W[lb]=	4.00E+02	weight
[2]	L[in]=	5.5	span

2.2 Conclusions

The natural frequency of the chopper box suspension is significantly above 100 Hz and should not be the source of excessive vibration during transportation or MEBT system operation.

3 References

[1] Roark"s Formulas for Stress and Strain, Sixth Edition
[2] LBNL Drawing 25B429, 25B422

O-RING SIZING FOR RECTANGULAR GROOVES:

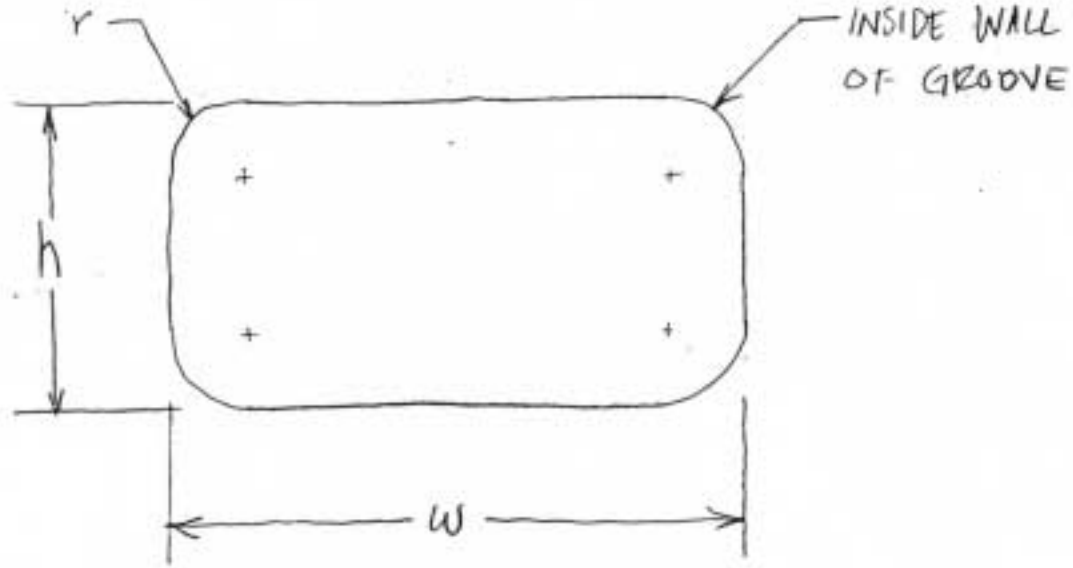

$$P = 2(h-2r) + 2(w-2r) + 2\pi r$$
$$= 2(h-2r+w-2r) + 2\pi r$$
$$= 2(h+w-4r) + 2\pi r$$
$$= 2\left[h+w-(4-\pi)r\right]$$

$P = \pi D$

D = O-RING ID

THE INSIDE PERIMETER OF THE O-RING GROOVE SHOULD BE NOMINALLY EQUAL TO THE ID OF THE O-RING. WITH A TOLERANCE OF 1 PERCENT OF THE O-RING ID (NOT LESS THAN 0.060", PG 4-14 PARKER HANDBOOK

$$\boxed{D = P = 2\left[h+w-(4-\pi)r\right]}$$

Author **Andrew S Zachoszcz**

Department **Mechanical Engineering**

Date **7/5/01**

APPENDIX D

Outside Vendor Component Information

HAND KNOB - 0.05 LEAD
L-2211 SERIES

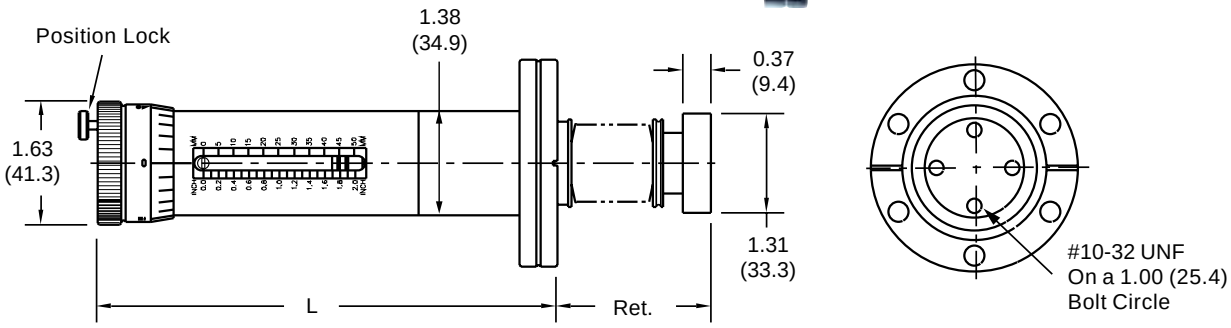

L-2211 Series Hand Knob-0.05 Lead

Flange	Stroke	L	Ret	Wt. Lbs.	Model.	Price
2.75	1.0 (25.4)	5.06 (128.5)	1.30 (33.0)	3.0 (1.4)	L-2211-1	$495.00
	2.0 (50.8)	6.06 (153.9)	1.68 (42.7)	3.5 (1.6)	L-2211-2	$595.00
	4.0 (101.6)	8.06 (204.7)	2.44 (62.0)	4.0 (1.8)	L-2211-4	$795.00
	6.0 (152.4)	10.06 (255.6)	3.20 (81.3)	4.5 (2.0)	L-2211-6	$995.00
NW 40	1.0 (25.4)	5.06 (128.5)	1.30 (33.0)	2.8 (1.3)	L-2211-1-SF	$490.00
	2.0 (50.8)	6.06 (153.9)	1.68 (42.7)	3.3 (1.5)	L-2211-2-SF	$590.00
	4.0 (101.6)	8.06 (204.7)	2.44 (62.0)	3.8 (1.7)	L-2211-4-SF	$790.00
	6.0 (152.4)	10.06 (255.6)	3.20 (81.3)	4.3 (1.9)	L-2211-6-SF	$990.00

SPECIFICATIONS

Sealing Mechanism:	Welded Bellows	**Maximum Axial Load:**	25 lbs. (11.3 kg) concentric load
Material Exposed to Vacuum:	Stainless Steel	**Maximum Lateral Load:**	20 lbs. (9.1 kg) @ tip in ret. position
Bakeout Temperature:	200° C (max)	**Scale Resolution - Linear:**	0.05 in. and 1 mm
Operating Temperature:	-20 to 150° C	**- Dial:**	0.002 (0.05 mm)
Pressure Range:	1×10^{-11} Torr	**Thread Lead:**	0.05 (1.3 mm) per revolution
Position Lock:	Thumb Screw		

Dimensions = inches (mm) Weights = lbs (kg)

Shoulder Screws

Hex Socket Head

303 Stainless Steel and 416 Stainless Steel Hardened RC 26-36

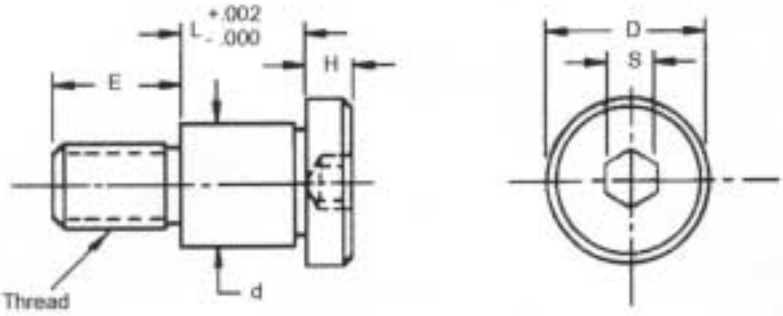

416 STAINLESS ST. HARDENED RC 26-36	303 STAINLESS STEEL							
STOCK NUMBER	STOCK NUMBER	THREAD	d +.000 - .001	L	D	H	E	S
PZ-28 PZ-29 PZ-30 PZ-31 PZ-32 PZ-33	PZ-28-3 PZ-29-3 PZ-30-3 PZ-31-3 PZ-32-3 PZ-33-3	1/4-20 UNC-2A	.3120	.2505 .3130 .3755 .5005 .6255 .7505	1/2	7/32	7/16	5/32
PZ-34 PZ-35 PZ-36 PZ-37	PZ-34-3 PZ-35-3 PZ-36-3 PZ-37-3	1/4-20 UNC-2A	.3745	.3130 .3755 .5005 .6255	1/2	7/32	7/16	5/32
PZ-38 PZ-39 PZ-40 PZ-41	PZ-38-3 PZ-39-3 PZ-40-3 PZ-41-3	5/16-18 UNC-2A	.3745	.3130 .3755 .5005 .6255	9/16	1/4	1/2	3/16
PZ-42 PZ-43 PZ-44 PZ-45	PZ-42-3 PZ-43-3 PZ-44-3 PZ-45-3	3/8-16 UNC-2A	.4995	.5005 .6255 .7505 1.0005	3/4	5/16	5/8	1/4

See page F13 for hex wrenches.

Job Description Line 1: SNS - FES MEBT		*Ordered By:* Zachoszcz,Andrew	*Category Code:* FE3312	*Job Order ID:* **003172-16**
Job Description Line 2: Mechanical Beam Transport Systems		*LBL Extension:* 510/486-5163	*Order Type:* Procurement Commodity	*Date Ordered:* 05/29/2001
Job Description Line 3: Chopper Beam Box Hardware		*E-Mail:* ASZachoszcz@lbl.go	*Released to Approver:*	*Project ID:*
Shop Estimate:	*Issued To:* Mehren,John R	*Approved By:* Oshatz,Daryl	*Approved:*	*Revised with JO:*
Cost Not To Exceed: $200.00	*Location:* Engineering Liaison	*E-Mail:* Daryl_Oshatz@lbl.go	*Released to DCC:*	
Accept Shop Estimate:	*Parent Project:*	*Deliver To:* Zachoszcz,Andrew	*Distribution Complete:*	*Date Closed:*
Email:		*Location:* 71-259	*All Parts Received:*	*Status:* Pending

Distribution

Send JO and Prints to	8 1/2 x 11	11 x 17	Full Size	No Print > than [Size]	No Print > than [Qty]	Mail Stop
Oshatz,Daryl	0	0	0	0	0	71-259
Zachoszcz,Andrew	0	0	0	0	0	71-259

Items Ordered

Item	Unit	Part or Dwg. No	Rev	Quantity Required	Description	Required Delivery Date	Promised Delivery Date	Estimated Cost	Requisition Number	Purchase Order Number
1	EA	PZ-40		8.00	SCHOULDER SCREW, BERG CATALOG OR EQUIV.	06/01/2001		20.00		
2	PG	98126A450		1.00	SHIM, MCMASTER-CARR OR EQUIV., .010" THICK, 3/8" ID, 5/8" OD	06/01/2001		5.00		
3	PG	98126A123		1.00	SHIM, MCMASTER-CARR OR EQUIV.18-8 SS, .001 THICK,3/8" ID, 5/8" OD	06/01/2001		5.00		

Job Order Notes

Date	Author	Comment

Item Status

Item No.	Part No.	Units	Qty Required	Qty Rec/Comp	Qty Due	Description
1	PZ-40	EA	8.00	0.00	8.00	SCHOULDER SCREW, BERG
2	98126A450	PG	1.00	0.00	1.00	SHIM, MCMASTER-CARR OR
3	98126A123	PG	1.00	0.00	1.00	SHIM, MCMASTER-CARR OR

TOOLING & CONSTRUCTION BALLS

Steel and Stainless Steel

One Piece and Two Piece Welded Construction

These high quality tooling and construction balls provide a precise reference point for critical machining operations. The standard and shoulder type listed below are available with slip fit or light press fit shank diameters. Slip-fit shank tolerance is +.0000/-.0004". Press-fit shank tolerance is +.0003/-.0000". Ball & shank are concentric within .0002" T.I.R.

One Piece Construction

The steel type are made of 1144 steel and heat treated to 53-57 RC. The stainless type are 440-C and heat treated to 55-58 RC.

Standard Tooling Balls

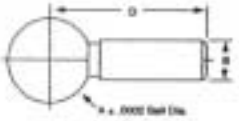

Slip Fit Cat. No.	Press Fit Cat. No.	+/-.0002 A	B	D	Price Each 1-24
Steel					
TCB-26705	TCB-26706	.2500	.1250	.5630	**$11.14**
TCB-26710	TCB-26711	.3750	.1875	.7500	**12.26**
TCB-26715	TCB-26716	.5000	.2500	.9400	**10.08**
TCB-26720	TCB-26721	.5000	.2500	1.5000	**11.67**
TCB-26730	TCB-26731	.5000	.3750	1.5000	**15.16**
Stainless Steel					
STB-26705	STB-26706	.2500	.1250	.5630	**15.63**
STB-26710	STB-26711	.3750	.1875	.7500	**16.37**

Shoulder Tooling Balls

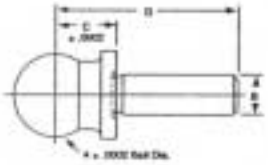

Precision ground shoulder provides precise "C" dimension to facilitate locating ball centerline.

Slip Fit Cat. No.	Press Fit Cat. No.	+/-.0002 A	B	+/-.0002 C	D	Price Each 1-24
Steel						
TCB-26805	TCB-26806	.2500	.1250	.2000	.5630	**$15.51**
TCB-26810	TCB-26811	.3750	.1875	.3000	.7500	**15.61**
TCB-26815	TCB-26816	.5000	.2500	.4000	.9400	**15.76**
TCB-26820	TCB-26821	.5000	.2500	.5000	1.3750	**15.76**
TCB-26830	TCB-26831	.7500	.3750	.5000	1.2500	**26.96**
Stainless Steel						
STB-26805	STB-26806	.2500	.1250	.2000	.5630	**17.86**
STB-26810	STB-26811	.3750	.1875	.3000	.7500	**19.29**
STB-26815	STB-26816	.5000	.2500	.4000	.9400	**21.03**
STB-26820	STB-26821	.5000	.2500	.5000	1.3750	**21.94**

Construction Balls

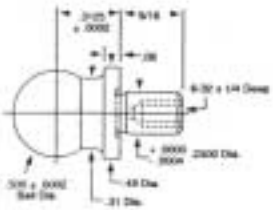

One size fits majority of applications. Available with tapped hole for screw mounting. Shoulder provides precise .3125 (+/-.0002) shoulder base to centerline dimension to facilitate locating ball center line. Ball & shank are concentric within .0002 T.I.R.

Steel Cat. No.	Stainless Cat. No.	Description	Price Each 1-24 Steel	Stainless
TCB-26875	STB-26875	With tapped shank as shown	**$18.90**	**$23.57**
TCB-26877	STB-26877	Shank not tapped	**17.68**	**22.69**

Two Piece Construction

Hardened ground steel. Shoulder tooling balls have a knurled shoulder. **The weld between the ball and the shank is designed so the ball will fall off if subject to unusually heavy lateral force.** This prevents set up and inspection errors that may occur because of a bent shank.

Standard Tooling Balls

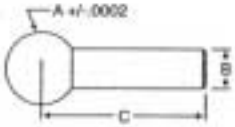

Press Fit Cat No.	Slip Fit Cat. No.	+/-.0002 A	B	C	Price Each 1-24
Steel					
UB-705	UB-706	.2500	.1250	.563	**$13.17**
UB-710	UB-711	.3750	.1875	.750	**14.58**
UB-715	UB-716	.5000	.2500	.940	**11.94**
UB-720	UB-721	.5000	.2500	1.500	**13.90**
UB-724	UB-725	.5000	.2500	2.875	**26.40**
UB-726	UB-727	.5000	.3125	1.500	**13.90**
UB-730	UB-731	.5000	.3750	1.500	**17.83**
UB-735	UB-736	.6250	.3125	1.063	**19.45**
UB-740	UB-741	.7500	.3750	1.250	**19.45**
UB-745	UB-746	.8750	.4375	1.440	**19.45**
UB-750	UB-751	1.0000	.5000	1.625	**23.97**

Shoulder Tooling Balls

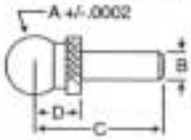

Press Fit Cat No.	Slip Fit Cat. No.	+/-.0002 A	B	C	D	Price Each 1-24
Steel						
UB-805	UB-806	.2500	.1250	.560	.2000	**$18.41**
UB-810	UB-811	.3750	.1875	.750	.3000	**18.41**
UB-815	UB-816	.5000	.2500	.940	.4000	**18.41**
UB-818	UB-819	.5000	.2500	1.125	.5000	**22.80**
UB-820	UB-821	.5000	.2500	1.375	.5000	**18.63**
UB-822	UB-823	.5000	.2500	1.625	1.0000	**22.80**
UB-824	UB-825	.5000	.2500	1.875	1.2500	**26.40**
UB-826	UB-827	.6250	.3125	1.050	.4500	**22.80**
UB-830	UB-831	.7500	.3750	1.250	.5000	**31.80**
UB-835	UB-836	1.0000	.5000	1.625	.7000	**36.92**

Construction Tooling Balls

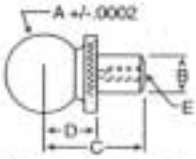

Construction balls can be pulled into a hole or bushing from below without applying pressure on the ball by using a cap screw in the internally tapped shank.

Cat No.	A	+.0000/-.0004 B	C	D	E	Price Each 1-24
Steel						
UB-870	.5000	.2500	.8750	.5000	6-32x¼	**$20.73**
UB-875	.5000	.2500	.6250	.3125	6-32x¼	**20.73**
UB-977	.5000	.2500	.6250	.3125	Plain Shank	**20.73**
UB-979	.5000	.3125	.9400	.5000	6-32x5/16	**16.04**
UB-984	.5000	.2500	.9400	.5000	6-32x5/16	**15.40**
UB-981	.5000	.2500	1.5000	.5000	Plain Shank	**16.79**
UB-982	.5000	.3125	1.5000	.5000	Plain Shank	**20.37**
UB-983	.5000	.3750	1.5000	.5000	Plain Shank	**21.86**

Bold catalog numbers conform to TCMAI standards.

FIXTU
Tw
Stain

and inspection
Eccentricity, ba

Fixture Balls -

Stainless Cat No.	Tung Carb Cat.
JFB-29001	TTB
JFB-29002	TTB
JFB-29003	TTB
JFB-29004	TTB
JFB-29005	TTB
—	TTB
JFB-29007	TTB

Checking Bal

Stainless Cat No.	Tung Carb Cat.
—	JFB-
JFB-29011	TTB-
JFB-29012	TTB-
JFB-29013	TTB-
JFB-29014	TTB-
JFB-29015	TTB-
JFB-29016	TTB-
JFB-29017	TTB-

Checking Bal

This checking
pressure on t
tapped hole in

Cat. No.	
JFB-29021	Ch

T

Protects toolin

Cat. No.
UB-653041

UNIVERSITY OF CALIFORNIA
ERNEST ORLANDO LAWRENCE
BERKELEY NATIONAL LABORATORY

FOR CONTRACT NO. DE-AC03-76SF00098
WITH THE DEPARTMENT OF ENERGY

SUBCONTRACTOR:
UC Components Inc
18700 Adams Court
PO Box 634
Morgan Hill, CA 95037

SHIP TO:
UC Lawrence Berkeley Lab
For the US Dept of Energy
One Cyclotron Road, Bldg.69
Berkeley, CA 94720

MAIL INVOICE IN DUPLICATE TO UNIVERSITY OF CALIFORNIA:
UC Lawrence Berkeley Lab
Accounts Payable Dept
PO Box 528
Berkeley, CA 94701

Subcontract

Subcontract #	Page
6507591	1

This subcontract number MUST appear on all invoices, packing lists, cartons and correspondence related to this subcontract.

Subcontract Date	Buyer
08-FEB-01	J MOREAU 510-486-5523
Revision Date	Buyer

Customer Account	Vendor No.	Payment Terms	Transportation Terms	F.O.B.	Ship Via
	103354	Net 30 Days	Acct. of Univ	Ship Pt. Freight	UPS

Subcontractor Contact: . Sales, (888) 483-6833

Requester / Deliver to: ZACHOSZCZ, ANDREW

FOR RESALE-State Sales Tax should not be charged, as the University holds State Sales Tax Permit SR CH 21-835970 for deliveries to Lawrence Berkeley National Laboratory.

LINE	PART NUMBER/DESCRIPTION	DELIVERY DATE	QUANTITY	UNIT	UNIT PRICE	EXTENSION	TAX
	Ship order complete. CONFIRMED TO: BRIAN. ON 08-FEB-01 -- DO NOT DUPLICATE!						
1	Bolt, hx. hd. ss, 1/4-28 x 2", vented, #H2832.	26-FEB-01	5.00	EA	5.23	26.15	N
2	Bolt, hx. hd. ss, vented, 1/4-28 x 1", #H2816.	26-FEB-01	9.00	EA	3.41	30.69	N
3	Bolt, hx. hd. Silver plated, 5/16-24 x 1 1/4", #3120-NA.	26-FEB-01	100.00	EA	2.15	215.00	N
4	Bolt, hx. hd. Silver plated, 1/4-28 x 1 1/4", #H-2820-NA.	26-FEB-01	125.00	EA	1.34	167.50	N

TOTAL: 439.34

The Terms and Conditions Attached Constitute A Part Of This Subcontract

-Requester's copy-

Authorized by _____
University of California, Lawrence Berkeley National Laboratory

ERNEST ORLANDO LAWRENCE
BERKELEY NATIONAL LABORATORY
ENGINEERING DIVISION
RESOURCES GROUP - LIAISON UNIT

RFQ #7021
PLEASE REFERENCE THIS NUMBER ON YOUR QUOTATION

29- JAN -0

*

C & H ENTERPRISES $27800 + 3700 6-8 WKS
L & E CUSTOM MACH. —— $41878 + 2910 4-6 WKS.

TO: MKS INSTRUMENTS —— $27084 + 3408 10 wks

ATTN:

Number of pages including cover page: 1 + Drawings (6).

FROM: John R. Mehren — Fax Number (510) 486 - 6668

UC - LBNL — Office Phone (510) 486 - 5524

One Cyclotron Road M/S 46-125 — Building 46B Room 106

Berkeley, CA. 94720

COMMENTS: Please quote price and delivery for the following item(s):
Provide all labor, equipment and materials, except as noted, to fabricate;

ITEM	DESCRIPTION	LBNL DWG. NUMBER	QUANTITY
1.	Weldment, Chopper Box	25B4214B (2 Shts.)	2ea.
2.	Cover Assembly, Chopper Box	25B4264B	2ea./4ea.(*)
3.	Flange, Micrometer Interface	25B4352A	2ea.
4.	Bracket, Chopper Ball Joint	25B4342A	2ea.
5.	Hinge Assembly, Outer	25B4284A	2ea.
6.	Hinge Assembly, Inner	25B4314B	2ea.
(*)	Please quote on both quantities.		

Close date is: 09-FEB-01 — Delivery req'd. by : 15-MAR-01

Thank you, JRM.

MKS INSTRUMENTS

HPS™ Products

Jim Coleman (Ext. 371)
5330 Sterling Drive, Boulder, CO 80301
Phone: (800) 345-1967; (303) 449-9861
Fax: (303) 449-2003
Email: mailto:jim_coleman@mksinst.com

February 9, 2001

Mr. John R. Mehren
Lawrence Berkeley National Laboratory

Phone: (510) 486-5524
Fax: (510) 486-6668

Re: RFQ # 7021

John,

Thank you for your request for quotation. The following are the HPS part numbers, descriptions and prices.

HPS # 99C0203	CHMB,LBNL#25B4214B	2 X $7,269.00 EACH
HPS # 99C0204	FLG,LBNL#25B4264B QTY of 4	2 X $2,126.00 EACH = 4252 4 X $1,915.00 EACH = 7660
HPS # 99C0205	FLG,LBNL#25B4352A	2 X $ 181.00 EACH
HPS # 99C0206	BRKT,LBNL#25B4342A	2 X $ 823.00 EACH
HPS # 99C0207	BRKT,LBNL#25B4284A	2 X $1,577.00 EACH
HPS # 99C0208	BRKT,LBNL#25B4314B	2 X $1,566.00 EACH

$27084 / $30492

Delivery will be ten (10) weeks ARO. FOB Boulder, CO. Terms net thirty days. HPS has a no cancellation or return policy for custom products.

Material will be 304 stainless steel.

HPS takes exception to the tight tolerances and offers realistic tolerances of plus or minus .050".

If you have any questions, please feel free to contact me. If you would like to place an order, please contact either the MKS sales office at (408) 988-4020 or Judy Nielsen (HPS Customer Service) at (800) 345-1967, extension 320.

Thank You,

Jim Coleman
Special Products Design Engineer

C AND H ENTERPRISES
Precision Machining, Welding & Fabricating
801 Boggs Avenue • Fremont, CA 94539 • (510) 226-6083 • Fax (510) 226-6087
www.candhenterprises.com • Sales@candhenterprises.com

Date 2-9-01

Quotation

Quote No. DR020901

Name John Mehren

Company LBNL

Phone (510) 486-5524

Fax (510) 486-6668

PART NUMBER	QUANTITY	UNIT PRICE	EXTENDED PRICE	DELIVERY
*25B4214B	2	9490.00	18980.00	6-8 WEEKS ARO
25B4264B	2	2950.00	5900.00	
25B4264B	4	2400.00	9600.00	
25B4352A	2	95.00	190.00	
25B4342A	2	290.00	580.00	
25B4284A	2	615.00	1230.00	
25B4314B	2	460.00	920.00	

Comments Thanks for the opportunity to quote this for you. On drawing *25B4214 the perpendicular of .005 to datum -A- call out needs to change . We need more tolerance due to we are not machining the inside of the chamber after weld. If you have any questions or concerns please feel free to call me.

Thank You ,

Dennis Romero
Project Coordinator

33483 WESTERN AVE
UNION CITY, CA 94587

Phone 510-477-8979
Fax 510-477-6738

Quote No. 203669

February 08, 2001

JOHN R. MEHREN
BERKLEY NATIONAL LABORATORY
ENGINEERING DIVISION UC-LBNL
ONE CYCLOTRON RD. M/S 46-125
BUILDING 46B ROOM 106
BERKELEY, CA 94720
US

Dear JOHN :

WE ARE PLEASED TO QUOTE THE FOLLOWING: RFQ #7021

Line	Part No.	Part Description
1	25B4214	WELDMENT, CHOPPER BOX

Rev B
Lead Time 4-6 wks.

Quantity	U/M	Unit Price	Extended Price	Addl Charge	Description
2	EA	16,800.00	33,600.00	0.00	

Line	Part No.	Part Description
2	25B4264	COVER ASSEMBLY, CHOPPER BOX

Rev B
Lead Time

Quantity	U/M	Unit Price	Extended Price	Addl Charge	Description
2	EA	2,105.00	4,210.00	0.00	
4	EA	1,780.00	7,120.00	0.00	+ 2 ho

Line	Part No.	Part Description
3	25B4352	FLANGE, MICROMETER INTERFACE

Rev A
Lead Time

Quantity	U/M	Unit Price	Extended Price	Addl Charge	Description
2	EA	98.00	196.00	0.00	

Line	Part No.	Part Description
4	25B4342	BRACKET, CHOPPER BALL JOINT

Rev A
Lead Time

Quantity	U/M	Unit Price	Extended Price	Addl Charge	Description
2	EA	188.00	376.00	0.00	

Line	Part No.	Part Description
5	25B4284	HINGE ASSEMBLY, OUTER

Rev A
Lead Time

Quantity	U/M	Unit Price	Extended Price	Addl Charge	Description
2	EA	870.00	1,740.00	0.00	

33483 WESTERN AVE
UNION CITY, CA 94587

Phone *510-477-8979*
Fax *510-477-6738*

Quote No. 203669

Line	*Part No.*	*Part Description*
6	25B4314	HINGE ASSEMBLY, INNER

Rev B
Lead Time

Quantity	*U/M*	*Unit Price*	*Extended Price*	*Addl Charge*	*Description*
2	EA	878.00	1,756.00	0.00	

Salesperson NONE

Prices Valid Through March 10, 2001

THANK YOU- CHARLIE OLIVER

#41878

UNIVERSITY OF CALIFORNIA
ERNEST ORLANDO LAWRENCE
BERKELEY NATIONAL LABORATORY

FOR CONTRACT NO. DE-AC03-76SF00098
WITH THE DEPARTMENT OF ENERGY

SUBCONTRACTOR:
Professional Plastics
2175 Kruse Drive
San Jose, CA 95131

SHIP TO:
UC Lawrence Berkeley Lab
For the US Dept of Energy
One Cyclotron Road, Bldg.69
Berkeley, CA 94720

MAIL INVOICE IN DUPLICATE TO UNIVERSITY OF CALIFORNIA:
UC Lawrence Berkeley Lab
Accounts Payable Dept
PO Box 528
Berkeley, CA 94701

Subcontract

Subcontract #	Page
6507575	1

This subcontract number MUST appear on all invoices, packing lists, cartons and correspondence related to this subcontract.

Subcontract Date	Buyer
08-FEB-01	J MOREAU 510-486-5523
Revision Date	Buyer

Customer Account	Vendor No.	Payment Terms	Transportation Terms	F.O.B.	Ship Via
	100336	Net 30 Days	Acct. of Univ	Ship Pt. Freight	UPS

Subcontractor Contact

Requester / Deliver to: ZACHOSZCZ, ANDREW

FOR RESALE-State Sales Tax should not be charged, as the University holds State Sales Tax Permit SR CH 21-835970 for deliveries to Lawrence Berkeley National Laboratory.

LINE	PART NUMBER/DESCRIPTION	DELIVERY DATE	QUANTITY	UNIT	UNIT PRICE	EXTENSION	TAX
	CONFIRMED TO: JOHN MCDONALD. ON 08-FEB-01 -- DO NOT DUPLICATE!						
1	Bar, round, VESPEL SP-3, .625" x 9.5".	14-FEB-01	1.00	EA	226.00	226.00	N

TOTAL: 226.00

The Terms and Conditions Attached Constitute A Part Of This Subcontract

-Requester's copy-

Authorized by _____
University of California, Lawrence Berkeley National Laboratory

FROM: ANDREW ZACHOSZCZ

@ LBL

E-MAIL: ASZachoszcz@lbl.gov

TEL: 510-486-4544

TO: DALIA

FAX: 408-545-0568

Dear Dalia,

Attached is drawing of the bearing sleeve that we are planing to use in our design.
Quantity of sleeves: 4
Some dimensions and tolerances may slightly change. Could you please provide information what kind of minimum tolerance on diameter you can achieve using VESPEL SP-3 material and how that affects the price?

Regards,

Andrew Zachoszcz

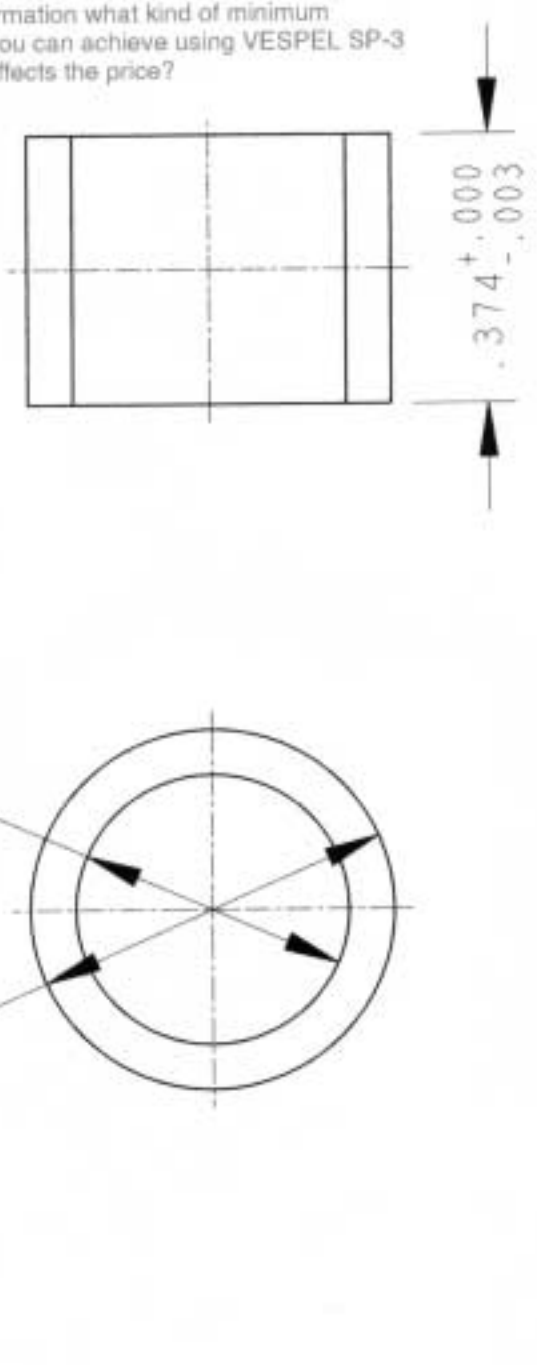

TO: DALIA
FAX: 486-545-0560

Dear Dalia,

Attached is drawing of the bearing sleeve that we are planing to use in our design.
Quantity of pieces: 1
Some dimensions and tolerances may slightly change. Could you please provide information what kind of minimum tolerance on diameter you can achieve using VESPEL SP-3 material and how that affects the price?

FAX
1-510-486-4544

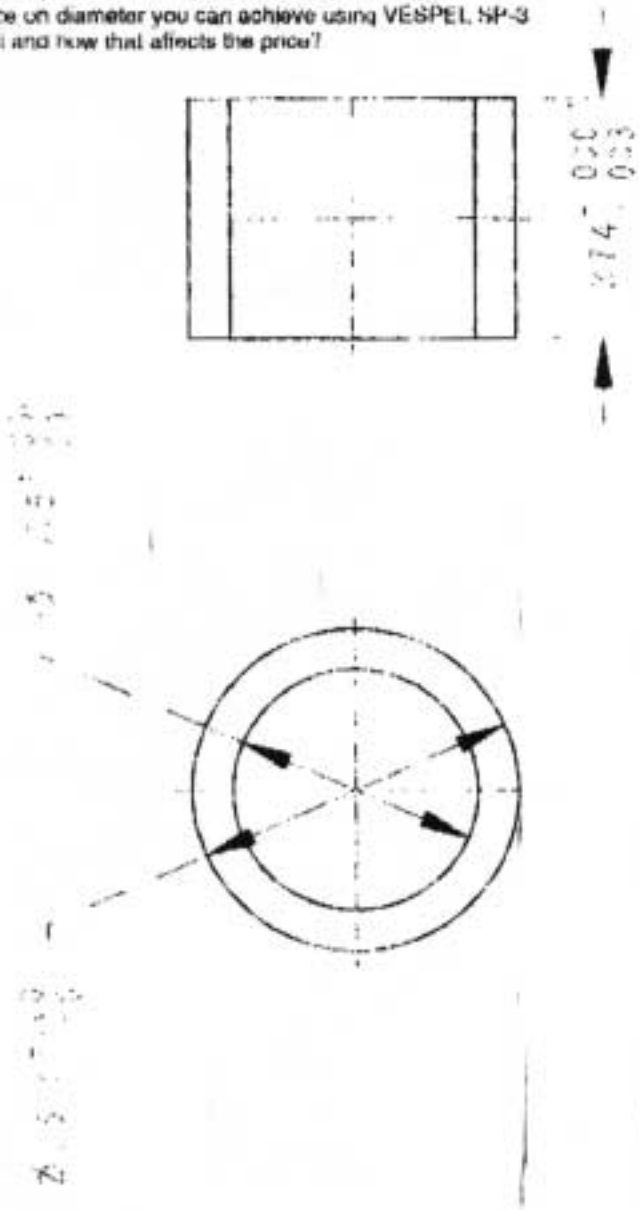

ATTN:
ANDREW
ZACHOSZOZ
218.00 EA
2 WEEKS OUT.
THANKS,
RAUL CADENA

Table 1 Summary of typical properties standard SP polyimide resins

	Property	Temp. °C	ASTM Method	Units	SP1 M	SP1 DF	SP21 M	SP21 DF	SP22 M	SP22 DF	SP211 M	SP211 DF	SP3 M
MECHANICAL	Tensile strength, ultimate	23	D1708 or	MPa	86,2	72,4	65,5	62,0	51,7	48,3	44,8	51,7	58,5
		260	E8†		41,4	36,5	37,9	30,3	23,4	26,2	24,1	24,1	
	Elongation, ultimate	23	D1708 or	%	7,5	7,5	4,5	5,5	3,0	2,5	3,5	5,5	4,0
		260	E8†		6,0	7,0	3,0	5,2	2,0	2,0	3,0	5,3	–
	Flexural strength, ultimate	23	D790	MPa	110,3	82,7	110,3	82,7	89,6	62,1	68,9	68,9	75,8
		260			62,1	44,8	62,0	48,3	44,8	37,9	34,5	34,5	39,9
	Flexural modulus	23	D790	MPa	3102	2482	3792	3171	4826	4826	3102	2758	3275
		260			1724	1448	2551	1792	2758	2758	1379	1379	1862
	Compressive stress	23	D695	MPa									
	at 1% strain				24,8	24,1*	29,0	22,8*	31,7	24,1	20,7	14,5*	34,5
	at 10% strain				133,1	112,4*	133,1	104,8*	112,4	93,8*	102,0	75,8*	127,6
	at 0,1% offset				51,0	33,1*	45,5	33,8*	41,4	25,5*	37,2	27,6*	
	Compressive modulus	23	D695	MPa	2413	2413*	2895	2275*	3275	2654*	2068	1379*	2413
	Axial fatigue, Endurance limit												
	at 10^7 cycles	23		MPa	55,8		46,2	–	–	–	–	–	–
		260			26,2		22,8	–	–	–	–	–	–
	at 10^7 cycles	23			42,1		32,4	–	–	–	–	–	–
		260			16,5		16,5	–	–	–	–	–	–
	Flexural fatigue, Endurance limit												
	at 10^7 cycles	23		MPa	65,5		65,5	–	–	–	–	–	–
	at 10^7 cycles	23			44,8		44,8	–	–	–	–	–	–
	Shear strength	23	D732	MPa	89,6		77,2						
	Impact strength, Izod, notched	23	D256	J/m	42,7		42,7						21,3
	Impact strength, Izod, unnotched	23	D256	J/m	747		320						112
	Poisson's ratio	23			0,41		0,41						
WEAR AND FRICTION	Wear rate ††			$m/s \times 10^{-10}$	17-85	17-85	6,3	6,3	4,2	4,2	4,9	4,9	17-23
	Coefficient of friction**												
	PV = 0,875 MPa·m/s				0,29	0,29	0,24	0,24	0,30	0,30	0,12	0,12	0,25
	PV = 3,5 MPa·m/s				–	–	0,12	0,12	0,09	0,09	0,08	0,08	0,17
	In vacuum				–	–	–	–	–	–	–	–	0,03
	Static in air				0,35	–	0,30	–	0,27	–	0,20	–	–
THERMAL	Coefficient of linear thermal expansion	23–260	D696	μm/m/°C	54	50	49	41	38	27	54	41	52
		−62 to +23				45		34					
	Thermal conductivity	40		W/m °C	0,35	0,29*	0,87	0,46*	1,73	0,89*	0,76	0,42*	0,47
	Specific heat			J/kg/°C	1130								
	Deformation under 14 MPa load	50	D621	%	0,14	0,20	0,10	0,17	0,08	0,14	0,13	0,29	0,12
	Deflection temperature at 2 MPa		D648	°C	~360		~360						

Table 2 Summary of typical properties standard SP polyimide resins

	Property	Temp. °C	ASTM Method	Units	SP1 M	SP1 DF	SP21 M	SP21 DF	SP22 M	SP22 DF	SP211 M	SP211 DF	SP3 M
ELECTRICAL	Dielectric constant	23	D150										
	at 102 Hz				3,62	–	13,53	–	–	–	–	–	–
	at 104 Hz				3,64	–	13,28	–		–	–	–	–
	at 106 Hz				3,55	–	13,41	–	–	–	–	–	–
	Dissipation factor	23	D150										
	at 102 Hz				0,0018	–	0,0053	–	–	–	–	–	–
	at 104 Hz				0,0036	–	0,0067	–		–	–	–	–
	at 106 Hz				0,0034	–	0,0106	–	–	–	–	–	–
	Dielectric strength short time 2 mm thick		D149	MV/m	22	–	9,84	–	–	–	–	–	–
	Volume resistivity	23	D257	Ω · m	10^{14}-10^{15}	–	10^{12}-10^{13}	–	–	–	–	–	–
	Surface resitivity	23	D257	Ω	10^{15}-10^{16}	–	–	–	–	–	–	–	–
OTHER PROPERTIES	Water absorption		D570	%									
	24 h	23			0,24	–	0,19	–	0,14	–	0,21	–	0,23
	48 h	50			0,72	–	0,57	–	0,42	–	0,49	–	0,65
	equilibrium, 50 % RH				1,0-1,3	1,0-1,3	0,8-1,1	0,8-1,1	–	–	–	–	–
	Specific gravity		D792		1,43	1,34	1,51	1,42	1,65	1,56	1,55	1,46	1,60
	Limiting Oxygen Index		D2863	%	53	–	49	–	–	–	–	–	–

† Machined tensile specimens made per D1708 and direct-formed specimens made per figure 10 of E-8 (standard bar for powdered metallurgy products), specimens tested by D638.

* Direct-formed (DF) properties marked with asterisk were measured parallel to the forming direction. All other direct-formed properties were measured perpendicular to the forming direction. Machined (M) properties are non-directional.

†† Unlubricated in air (PV 0,875 MPa m/s).

** Steady state, unlubricated in air.

M: Parts machined out of shapes material.

DF: Parts obtained by «Direct Forming» process.

REQ	ITEM	PART NUMBER	DESCRIPTION
			Ø1.00 ROD, 17-4PH STAINLESS STEEL, CONDITION "A"

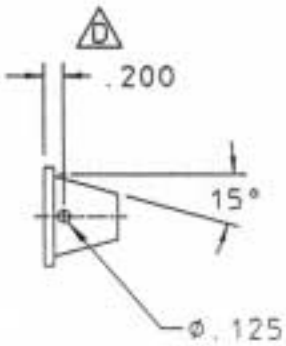

NOTES: UNLESS OTHERWISE SPECIFIED
1. HEAT TREAT IN INERT ATMOSPHERE FURNACE AT 900°F FOR 1 HOUR. FURNACE COOL. APPROXIMATE HARDNESS IS ROCKWELL "C" 45

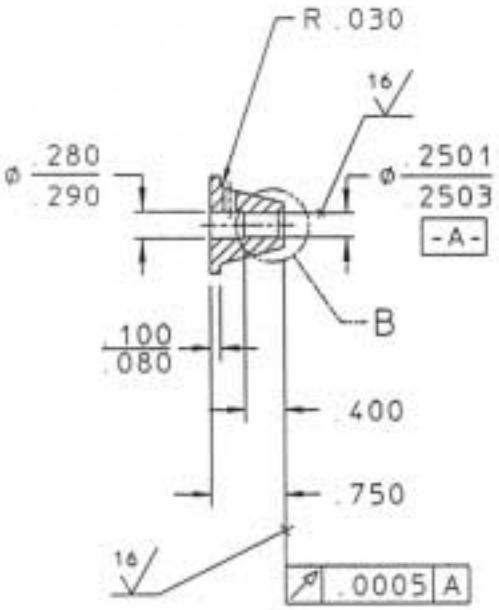

SECTION A-A

SCALE 1:1

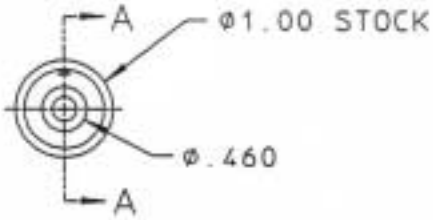

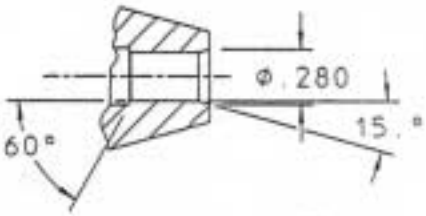

DETAIL B

SCALE 2:1

2005363D

REV	DWG	CHK	ZONE	DATE	CHANGES
D	EF		D-4	1/27/99	DIM. .200 WAS .250 ±.020
C	JA			11/13/98	REDRAW CAD DRAWING
B	JWC			10/14/98	REDESIGNED

UNLESS OTHERWISE SPECIFIED
TOLERANCES: .X ± FRAC. ± ; .XX ± ANGLES ± 1° ; .XXX ± .010 FINISH 63
THREADS ARE CLASS 2
CHAMFER ENDS OF ALL SCREW THREADS 30°, OF 1.5 PITCH AND RELIEF WITH ROUND NOSE TOOL ON MACHINE CUT THREADS.
BREAK EDGES .015 MAX. ON MACHINED WORK
REMOVE BURRS WELD SPLATTER & LOOSE SCALE
REFERENCES: ANSI Y14.5 & B46.1.

SHOP ORDERS
ACCT. NO. SERIAL NO.
DATE ISSUED DATE REQD. NO. REQD.
DELIVER TO
SURFACE TREATMENT DEGREASE
IDENT. METH. TAG
DWN. BY J. AKRE DATE 11-23-88
CHK. BY T. LAURITZEN DATE 1-27-89

LAWRENCE BERKELEY LABORATORY
UNIVERSITY OF CALIFORNIA-BERKELEY
ALS SURVEY
FIXTURES
SURVEY FIDUCIAL POST

PATENT CLEAR | DWG. TYPE C-DETAIL | SHOWN ON | SCALE 1:1 | DO NOT SCALE PRINTS
MICROFILMED | DESIGN ACCT. NO. | CATEGORY CODE AL0907 | DWG. NO. 2005363 | SIZE | REV. D

Heavy Duty Hoist Rings - Standard

Heavy Duty Hoist Rings -Metric

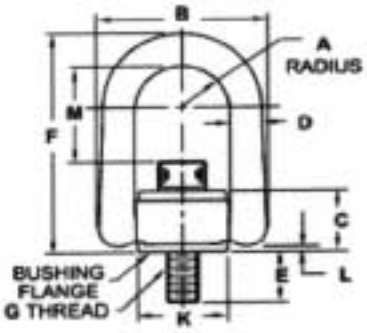

- MATERIAL: Forged alloy steel with minimum tensile strength of 180,000 psi.
- Range of movement: Pivot 180°, swivel 360°
- MINIMUM SAFETY FACTOR=5:1
- Meets Military Specification No. MIL-STD 1365(11) or MIL-STD 209C
- American HEAVY DUTY Hoist Rings are specified and used in nuclear energy equipment.
- 100% magnetic particle inspected.
- Meets OSHA Standards
- Destructive testing by outside independent laboratories.

PATENT #4,570,987, #4,641,986, #5,405,210, Other Patents Pending

Part No.	Rated Load	A	B	C	D	E	F	G	K	L	M	ft./lb.	lbs.
33112	550	.65	2.29	.96	.44	.56	3.23	1/4-20	1.25	.15	1.57	5	.50
33212	800	.65	2.29	.96	.44	.56	3.23	5/16-18	1.25	.15	1.51	7	.52
33214	800	.65	2.29	.96	.44	1.06	3.23	5/16-18	1.25	.15	1.51	7	.54
33312	1000	.65	2.29	.96	.44	.56	3.23	3/8-16	1.25	.15	1.45	12	.56
33314	1000	.65	2.29	.96	.44	1.06	3.23	3/8-16	1.25	.15	1.45	12	.58
33512	2500	1.00	3.50	1.50	.75	.75	5.31	1/2-13	1.89	.17	2.56	28	1.71
33515	2500	1.00	3.50	1.50	.75	1.00	5.31	1/2-13	1.89	.17	2.56	28	1.72
33516	2500	1.00	3.50	1.50	.75	1.25	5.31	1/2-13	1.89	.17	2.56	28	1.82
33612	4000	1.00	3.50	1.50	.75	.75	5.31	5/8-11	1.89	.17	2.44	60	1.76
33614	4000	1.00	3.50	1.50	.75	1.00	5.31	5/8-11	1.89	.17	2.44	60	1.78
33615	4000	1.00	3.50	1.50	.75	1.25	5.31	5/8-11	1.89	.17	2.44	60	1.88
33714	5000	1.00	3.50	1.50	.75	1.00	5.31	3/4-10	1.89	.17	2.31	100	1.89
33716	5000	1.00	3.50	1.50	.75	1.50	5.31	3/4-10	1.89	.17	2.31	100	2.02
33108	7000	1.40	5.10	2.05	1.00	.95	7.00	3/4-10	2.81	.18	3.20	100	7.20
33102	7000	1.40	5.10	2.05	1.00	1.20	7.00	3/4-10	2.81	.18	3.20	100	7.23
33103	7000	1.40	5.10	2.05	1.00	1.45	7.00	3/4-10	2.81	.18	3.20	100	7.25
33104	8000	1.40	5.10	2.05	1.00	.95	7.00	7/8-9	2.81	.18	3.07	160	7.33
33101	8000	1.40	5.10	2.05	1.00	1.20	7.00	7/8-9	2.81	.18	3.07	160	7.33
33105	10000	1.40	5.10	2.05	1.00	1.45	7.00	1-8	2.81	.18	2.95	230	7.57
33106	10000	1.40	5.10	2.05	1.00	1.20	7.00	1-8	2.81	.18	2.95	230	7.63
33107	10000	1.40	5.10	2.05	1.00	2.20	7.00	1-8	2.81	.18	2.95	230	7.81
33402	15000	2.00	6.75	2.87	1.25	1.88	9.22	1 1/4-7	3.88	.18	3.74	470	15.74
33401	15000	2.00	6.75	2.87	1.25	2.63	9.22	1 1/4-7	3.88	.18	3.74	470	16.0
33420	20000	2.00	6.75	2.87	1.25	2.63	9.22	1 3/8-6	3.88	.32	3.62	670	17.2
33424	24000	2.00	6.75	2.87	1.25	2.63	9.22	1 1/2-6	3.88	.32	3.49	800	18.1
33427	30000	2.00	6.75	2.87	1.25	2.96	9.22	2-4 1/2	3.88	.32	3.49	800	22.9
33432	30000	2.00	6.75	2.87	1.25	2.96	9.22	2-8	3.88	.32	3.49	800	22.9

*Recommended torque load

For load ranges of 50,000 to 100,000 lbs. refer to our Safety Engineered Hoist Rings. Replacement screws are available.

HEAVY DUTY HOIST RINGS ARE COMPLETELY INTERCHANGEABLE WITH S.E.H.R.

Back To The Previous Page

Back To Our Home Page

© 1997-2000 American Drill Bushing. All Rights Reserved

Author
Andrew S Zachoszcz, Daryl Oshatz

Department
Mechanical Engineering

Date
8/22/01

APPENDIX E

Fiducialization Data

Lawrence Berkeley National Lab
Precision Measurement Services
Robert Connors
Building 77/158
(510) 486-7611

DESCRIPTION : chopper box weldment fidual

PART : Chop Box #1

POINT BEAM_ORIGN CART PCS11 INCH ANGDEC 10:02 June 01,2001

	MEAS	NOM	DEV	UPTOL	LWTOL	O/T
X	0.0000	-0.0010	0.0010	0.0000	0.0000	0.0010
Y	0.0000	0.0021	-0.0021	0.0000	0.0000	-0.0021
Z	0.0000	-0.0002	0.0002	0.0000	0.0000	0.0002
I	0.0000	0.0000	0.0000			
J	0.0000	-0.0000	0.0000			
K	0.0000	1.0000	-1.0000			

PLANE DAT_A CART PCS11 INCH ANGDEC 10:02 June 01,2001

X	-0.0009	-7.5168	7.5159	0.0000	0.0000	7.5159
Y	-0.0105	-1.0054	0.9948	0.0000	0.0000	0.9948
Z	5.6984	5.7026	-0.0043	0.0000	0.0000	-0.0043
I	0.0000	-0.0095	0.0095			
J	0.0000	-0.0021	0.0021			
K	1.0000	1.0000	0.0000			
Flat			0.0066	0.0010		0.0056

POINT IN_PNT CART PCS11 INCH ANGDEC 10:02 June 01,2001

X	-7.7483	-7.7510	0.0027	0.0000	0.0000	0.0027
Y	0.0000	0.0021	-0.0021	0.0000	0.0000	-0.0021
Z	-0.0002	-0.0002	-0.0000	0.0000	0.0000	-0.0000
I	0.0000	0.0000	0.0000			
J	0.0000	-0.0000	0.0000			
K	0.0000	1.0000	-1.0000			

POINT IN_C_PNT CART PCS11 INCH ANGDEC 10:02 June 01,2001

X	-7.3762	-7.3760	-0.0002	0.0000	0.0000	-0.0002
Y	0.0000	0.0021	-0.0021	0.0000	0.0000	-0.0021
Z	-0.0002	-0.0002	-0.0000	0.0000	0.0000	-0.0000
I	0.0000	0.0000	0.0000			
J	0.0000	-0.0000	0.0000			
K	0.0000	1.0000	-1.0000			

POINT OUT_C_PNT CART PCS11 INCH ANGDEC 10:02 June 01,2001

X	7.3742	7.3740	0.0002	0.0000	0.0000	0.0002
Y	0.0000	0.0021	-0.0021	0.0000	0.0000	-0.0021
Z	0.0002	-0.0002	0.0004	0.0000	0.0000	0.0004
I	0.0000	0.0000	0.0000			
J	0.0000	-0.0000	0.0000			
K	0.0000	1.0000	-1.0000			

POINT OUT_PNT CART PCS11 INCH ANGDEC 10:02 June 01,2001

X	7.7483	7.7490	-0.0007	0.0000	0.0000	-0.0007
Y	0.0000	0.0021	-0.0021	0.0000	0.0000	-0.0021
Z	0.0002	-0.0002	0.0005	0.0000	0.0000	0.0005

```
I           0.0000      0.0000      0.0000
J           0.0000     -0.0000      0.0000
K           0.0000      1.0000     -1.0000
_____________________________________________________________________________
_
       PLANE NEAR_BOT CART PCS11 INCH ANGDEC 10:04 June 01,2001
X           0.0001      0.8084     -0.8083      0.0000      0.0000     -0.8083
Y          -7.4827     -7.3916     -0.0911      0.0000      0.0000     -0.0911
Z          -4.2906     -4.3000      0.0094      0.0000      0.0000      0.0094
I          -0.0003      0.0000     -0.0003
J          -0.0061      0.0000     -0.0061
K          -1.0000     -1.0000      0.0000
Flat                                0.0000      0.0010                   |*+++
_____________________________________________________________________________
_
       PLANE FAR_BOT CART PCS11 INCH ANGDEC 10:04 June 01,2001
X          -0.0005      0.0178     -0.0183      0.0000      0.0000     -0.0183
Y           7.4836      7.0507      0.4329      0.0000      0.0000      0.4329
Z          -4.2865     -4.3000      0.0135      0.0000      0.0000      0.0135
I           0.0000      0.0000      0.0000
J           0.0070      0.0000      0.0070
K          -1.0000     -1.0000      0.0000
Flat                                0.0000      0.0010                   |*+++
_____________________________________________________________________________
_
       POINT NEAR_DOWN CART PCS11 INCH ANGDEC 10:04 June 01,2001
X           2.0018      2.0000      0.0018      0.0000      0.0000      0.0018
Y          -7.0496     -7.0500      0.0004      0.0000      0.0000      0.0004
Z          -4.0511     -4.0500     -0.0011      0.0000      0.0000     -0.0011
I           1.0000      1.0000     -0.0000
J          -0.0010     -0.0000     -0.0010
K           0.0025      0.0000      0.0025
_____________________________________________________________________________
_
       POINT NEAR_UP CART PCS11 INCH ANGDEC 10:04 June 01,2001
X          -1.9984     -2.0000      0.0016      0.0000      0.0000      0.0016
Y          -7.0493     -7.0500      0.0007      0.0000      0.0000      0.0007
Z          -4.0491     -4.0500      0.0009      0.0000      0.0000      0.0009
I          -1.0000     -1.0000      0.0000
J           0.0001      0.0000      0.0001
K          -0.0018      0.0000     -0.0018
_____________________________________________________________________________
_
       POINT FAR_DOWN CART PCS11 INCH ANGDEC 10:04 June 01,2001
X           1.9948      2.0000     -0.0052      0.0000      0.0000     -0.0052
Y           7.0506      7.0500      0.0006      0.0000      0.0000      0.0006
Z          -4.0511     -4.0500     -0.0011      0.0000      0.0000     -0.0011
I           1.0000      1.0000     -0.0000
J          -0.0008     -0.0000     -0.0008
K           0.0018      0.0000      0.0018
_____________________________________________________________________________
_
       POINT FAR_UP CART PCS11 INCH ANGDEC 10:04 June 01,2001
X          -2.0056     -2.0000     -0.0056      0.0000      0.0000     -0.0056
Y           7.0511      7.0500      0.0011      0.0000      0.0000      0.0011
Z          -4.0491     -4.0500      0.0009      0.0000      0.0000      0.0009
I          -1.0000     -1.0000      0.0000
J          -0.0009      0.0000     -0.0009
K          -0.0024      0.0000     -0.0024
_____________________________________________________________________________
_
      SPHERE BALL_A CART PCS11 INCH ANGDEC 10:07 June 01,2001
X           6.2377      6.2500     -0.0123      0.0000      0.0000     -0.0123
```

```
Y           6.7225      6.7227     -0.0002      0.0000      0.0000     -0.0002
Z           4.0715      4.0716     -0.0001      0.0000      0.0000     -0.0001
Dia         0.4999      0.5000     -0.0001      0.0050     -0.0050   ---*|++++
Cirlty                              0.0002      0.0004                  |+*++
_____________________________________________________________________________
_
      SPHERE BALL_B CART PCS11 INCH ANGDEC 10:07 June 01,2001
X          -6.2484     -6.2500      0.0016      0.0000      0.0000      0.0016
Y           6.7210      6.7209      0.0001      0.0000      0.0000      0.0001
Z           4.0688      4.0689     -0.0001      0.0000      0.0000     -0.0001
Dia         0.4998      0.5000     -0.0002      0.0050     -0.0050   ---*|++++
Cirlty                              0.0002      0.0004                  |++*+
_____________________________________________________________________________
_
      SPHERE BALL_C CART PCS11 INCH ANGDEC 10:07 June 01,2001
X          -0.0054      0.0000     -0.0054      0.0000      0.0000     -0.0054
Y           6.7119      6.7177     -0.0058      0.0000      0.0000     -0.0058
Z          -3.0770     -3.0784      0.0014      0.0000      0.0000      0.0014
Dia         0.4998      0.5000     -0.0002      0.0050     -0.0050   ---*|++++
Cirlty                              0.0000      0.0004                  |*+++
_____________________________________________________________________________
_
      SPHERE BALL_D CART PCS11 INCH ANGDEC 10:07 June 01,2001
X          -6.2394     -6.2500      0.0106      0.0000      0.0000      0.0106
Y          -6.7257     -6.7258      0.0001      0.0000      0.0000      0.0001
Z           4.0716      4.0718     -0.0002      0.0000      0.0000     -0.0002
Dia         0.4997      0.5000     -0.0003      0.0050     -0.0050   ---*|++++
Cirlty                              0.0003      0.0004                  |++*+
_____________________________________________________________________________
_
      SPHERE BALL_E CART PCS11 INCH ANGDEC 10:07 June 01,2001
X           6.2508      6.2500      0.0008      0.0000      0.0000      0.0008
Y          -6.7238     -6.7246      0.0008      0.0000      0.0000      0.0008
Z           4.0746      4.0747     -0.0001      0.0000      0.0000     -0.0001
Dia         0.4997      0.5000     -0.0003      0.0050     -0.0050   ---*|++++
Cirlty                              0.0003      0.0004                  |+++*
_____________________________________________________________________________
_
      SPHERE BALL_F CART PCS11 INCH ANGDEC 10:07 June 01,2001
X           0.0044      0.0000      0.0044      0.0000      0.0000      0.0044
Y          -6.7177     -6.7177     -0.0000      0.0000      0.0000     -0.0000
Z          -3.0785     -3.0784     -0.0001      0.0000      0.0000     -0.0001
Dia         0.4999      0.4999     -0.0000      0.0050     -0.0050   ---*|++++
Cirlty                              0.0001      0.0004                  |+*++
_____________________________________________________________________________
_
OUTPUT BALLS IN MM TO 6 PLACES
      SPHERE BALL_A CART PCS11 MM ANGDEC 10:07 June 01,2001
X       158.438815
Y       170.751276
Z       103.416509
Dia      12.698178
Cirlty                                          0.010000                  |+*++
_____________________________________________________________________________
_
      SPHERE BALL_B CART PCS11 MM ANGDEC 10:07 June 01,2001
X      -158.709858
Y       170.712376
Z       103.347591
Dia      12.695312
Cirlty                                          0.010000                  |++*+
_____________________________________________________________________________
_
```

```
      SPHERE BALL_C CART PCS11 MM ANGDEC 10:07 June 01,2001
X        -0.137235
Y       170.481270
Z       -78.156037
Dia      12.695131
Cirlty                                        0.010000                   |*+++
_____________________________________________________________________________
_
      SPHERE BALL_D CART PCS11 MM ANGDEC 10:07 June 01,2001
X      -158.479751
Y      -170.831894
Z       103.418575
Dia      12.691503
Cirlty                                        0.010000                   |++*+
_____________________________________________________________________________
_
      SPHERE BALL_E CART PCS11 MM ANGDEC 10:07 June 01,2001
X       158.769548
Y      -170.783413
Z       103.493872
Dia      12.693317
Cirlty                                        0.010000                   |+++*
_____________________________________________________________________________
_
      SPHERE BALL_F CART PCS11 MM ANGDEC 10:07 June 01,2001
X         0.112104
Y      -170.629645
Z       -78.193170
Dia      12.696367
Cirlty                                        0.010000                   |+*++
_____________________________________________________________________________
_
```

Lawrence Berkeley National Lab
Precision Measurement Services
Robert Connors
Building 77/158
(510) 486-7611

DESCRIPTION : chopper box weldment fidual

PART : Chop Box #2

POINT BEAM_ORIGN CART PCS11 INCH ANGDEC 10:52 June 01,2001

	MEAS	NOM	DEV	UPTOL	LWTOL	O/T
X	0.0000	-0.0065	0.0065	0.0000	0.0000	0.0065
Y	0.0000	0.0085	-0.0085	0.0000	0.0000	-0.0085
Z	0.0000	-0.0001	0.0001	0.0000	0.0000	0.0001
I	0.0000	0.0000	0.0000			
J	0.0000	0.0000	0.0000			
K	0.0000	1.0000	-1.0000			

PLANE DAT_A CART PCS11 INCH ANGDEC 10:52 June 01,2001

X	-0.0057	-7.5047	7.4990	0.0000	0.0000	7.4990
Y	-0.0079	-1.1275	1.1196	0.0000	0.0000	1.1196
Z	5.6981	5.7014	-0.0033	0.0000	0.0000	-0.0033
I	0.0000	-0.0103	0.0103			
J	0.0000	-0.0018	0.0018			
K	1.0000	0.9999	0.0001			
Flat			0.0079	0.0010		0.0069

POINT IN_PNT CART PCS11 INCH ANGDEC 10:52 June 01,2001

X	-7.7469	-7.7565	0.0096	0.0000	0.0000	0.0096
Y	-0.0000	0.0085	-0.0085	0.0000	0.0000	-0.0085
Z	-0.0002	-0.0001	-0.0001	0.0000	0.0000	-0.0001
I	0.0000	0.0000	0.0000			
J	0.0000	0.0000	0.0000			
K	0.0000	1.0000	-1.0000			

POINT IN_C_PNT CART PCS11 INCH ANGDEC 10:52 June 01,2001

X	-7.3730	-7.3815	0.0085	0.0000	0.0000	0.0085
Y	-0.0000	0.0085	-0.0085	0.0000	0.0000	-0.0085
Z	-0.0002	-0.0001	-0.0001	0.0000	0.0000	-0.0001
I	0.0000	0.0000	0.0000			
J	0.0000	0.0000	0.0000			
K	0.0000	1.0000	-1.0000			

POINT OUT_C_PNT CART PCS11 INCH ANGDEC 10:52 June 01,2001

X	7.3729	7.3685	0.0044	0.0000	0.0000	0.0044
Y	-0.0000	0.0085	-0.0085	0.0000	0.0000	-0.0085
Z	0.0002	-0.0001	0.0002	0.0000	0.0000	0.0002
I	0.0000	0.0000	0.0000			
J	0.0000	0.0000	0.0000			
K	0.0000	1.0000	-1.0000			

POINT OUT_PNT CART PCS11 INCH ANGDEC 10:52 June 01,2001

X	7.7469	7.7435	0.0035	0.0000	0.0000	0.0035
Y	-0.0000	0.0085	-0.0085	0.0000	0.0000	-0.0085
Z	0.0002	-0.0001	0.0003	0.0000	0.0000	0.0003

```
I           0.0000      0.0000      0.0000
J           0.0000      0.0000      0.0000
K           0.0000      1.0000     -1.0000
_____________________________________________________________________________
_
       PLANE NEAR_BOT CART PCS11 INCH ANGDEC 10:54 June 01,2001
X          -0.0006      0.8084     -0.8090      0.0000      0.0000     -0.8090
Y          -7.4826     -7.3916     -0.0910      0.0000      0.0000     -0.0910
Z          -4.2921     -4.3000      0.0079      0.0000      0.0000      0.0079
I           0.0004      0.0000      0.0004
J          -0.0081      0.0000     -0.0081
K          -1.0000     -1.0000      0.0000
Flat                                0.0000      0.0010                   |*+++
_____________________________________________________________________________
_
       PLANE FAR_BOT CART PCS11 INCH ANGDEC 10:54 June 01,2001
X          -0.0005      0.0178     -0.0183      0.0000      0.0000     -0.0183
Y           7.4836      7.0507      0.4329      0.0000      0.0000      0.4329
Z          -4.2830     -4.3000      0.0170      0.0000      0.0000      0.0170
I           0.0005      0.0000      0.0005
J           0.0090      0.0000      0.0090
K          -1.0000     -1.0000      0.0000
Flat                                0.0000      0.0010                   |*+++
_____________________________________________________________________________
_
       POINT NEAR_DOWN CART PCS11 INCH ANGDEC 10:55 June 01,2001
X           1.9974      2.0000     -0.0026      0.0000      0.0000     -0.0026
Y          -7.0499     -7.0500      0.0001      0.0000      0.0000      0.0001
Z          -4.0512     -4.0500     -0.0012      0.0000      0.0000     -0.0012
I           1.0000      1.0000     -0.0000
J           0.0006     -0.0000      0.0006
K           0.0022      0.0000      0.0022
_____________________________________________________________________________
_
       POINT NEAR_UP CART PCS11 INCH ANGDEC 10:55 June 01,2001
X          -2.0029     -2.0000     -0.0029      0.0000      0.0000     -0.0029
Y          -7.0496     -7.0500      0.0004      0.0000      0.0000      0.0004
Z          -4.0490     -4.0500      0.0010      0.0000      0.0000      0.0010
I          -1.0000     -1.0000      0.0000
J          -0.0002      0.0000     -0.0002
K          -0.0020      0.0000     -0.0020
_____________________________________________________________________________
_
       POINT FAR_DOWN CART PCS11 INCH ANGDEC 10:55 June 01,2001
X           1.9939      2.0000     -0.0061      0.0000      0.0000     -0.0061
Y           7.0503      7.0500      0.0003      0.0000      0.0000      0.0003
Z          -4.0511     -4.0500     -0.0011      0.0000      0.0000     -0.0011
I           1.0000      1.0000     -0.0000
J           0.0002     -0.0000      0.0002
K           0.0017      0.0000      0.0017
_____________________________________________________________________________
_
       POINT FAR_UP CART PCS11 INCH ANGDEC 10:55 June 01,2001
X          -2.0065     -2.0000     -0.0065      0.0000      0.0000     -0.0065
Y           7.0506      7.0500      0.0006      0.0000      0.0000      0.0006
Z          -4.0492     -4.0500      0.0008      0.0000      0.0000      0.0008
I          -1.0000     -1.0000      0.0000
J           0.0000      0.0000      0.0000
K          -0.0022      0.0000     -0.0022
_____________________________________________________________________________
_
      SPHERE BALL_A CART PCS11 INCH ANGDEC 11:00 June 01,2001
X           6.2456      6.2500     -0.0044      0.0000      0.0000     -0.0044
```

```
Y           6.7257      6.7227      0.0030      0.0000      0.0000      0.0030
Z           4.0694      4.0716     -0.0022      0.0000      0.0000     -0.0022
Dia         0.4997      0.5000     -0.0003      0.0050     -0.0050   ---*|++++
Cirlty                              0.0006      0.0004                  0.0002
_____________________________________________________________________________
_
      SPHERE BALL_B CART PCS11 INCH ANGDEC 11:00 June 01,2001
X          -6.2517     -6.2500     -0.0017      0.0000      0.0000     -0.0017
Y           6.7278      6.7209      0.0069      0.0000      0.0000      0.0069
Z           4.0762      4.0689      0.0073      0.0000      0.0000      0.0073
Dia         0.4999      0.5000     -0.0001      0.0050     -0.0050   ---*|++++
Cirlty                              0.0004      0.0004                  0.0001
_____________________________________________________________________________
_
      SPHERE BALL_C CART PCS11 INCH ANGDEC 11:00 June 01,2001
X          -0.0029      0.0000     -0.0029      0.0000      0.0000     -0.0029
Y           6.7152      6.7177     -0.0025      0.0000      0.0000     -0.0025
Z          -3.0700     -3.0784      0.0084      0.0000      0.0000      0.0084
Dia         0.4999      0.5000     -0.0001      0.0050     -0.0050   ---*|++++
Cirlty                              0.0001      0.0004                   |*+++
_____________________________________________________________________________
_
      SPHERE BALL_D CART PCS11 INCH ANGDEC 11:00 June 01,2001
X          -6.2506     -6.2500     -0.0006      0.0000      0.0000     -0.0006
Y          -6.7281     -6.7258     -0.0023      0.0000      0.0000     -0.0023
Z           4.0722      4.0718      0.0004      0.0000      0.0000      0.0004
Dia         0.4997      0.5000     -0.0003      0.0050     -0.0050   ---*|++++
Cirlty                              0.0002      0.0004                   |+*++
_____________________________________________________________________________
_
      SPHERE BALL_E CART PCS11 INCH ANGDEC 11:00 June 01,2001
X           6.2451      6.2500     -0.0049      0.0000      0.0000     -0.0049
Y          -6.7289     -6.7246     -0.0043      0.0000      0.0000     -0.0043
Z           4.0681      4.0747     -0.0066      0.0000      0.0000     -0.0066
Dia         0.4998      0.5000     -0.0002      0.0050     -0.0050   ---*|++++
Cirlty                              0.0002      0.0004                   |+*++
_____________________________________________________________________________
_
      SPHERE BALL_F CART PCS11 INCH ANGDEC 11:00 June 01,2001
X          -0.0058      0.0000     -0.0058      0.0000      0.0000     -0.0058
Y          -6.7206     -6.7177     -0.0029      0.0000      0.0000     -0.0029
Z          -3.0657     -3.0784      0.0127      0.0000      0.0000      0.0127
Dia         0.4999      0.5000     -0.0001      0.0050     -0.0050   ---*|++++
Cirlty                              0.0001      0.0004                   |*+++
_____________________________________________________________________________
_
OUTPUT BALLS IN MM TO 6 PLACES
      SPHERE BALL_A CART PCS11 MM ANGDEC 11:00 June 01,2001
X       158.637518
Y       170.832362
Z       103.361945
Dia      12.693623
Cirlty                                          0.010000                 0.0058
_____________________________________________________________________________
_
      SPHERE BALL_B CART PCS11 MM ANGDEC 11:00 June 01,2001
X      -158.793029
Y       170.886645
Z       103.535563
Dia      12.696301
Cirlty                                          0.010000                 0.0014
_____________________________________________________________________________
_
```

```
      SPHERE BALL_C CART PCS11 MM ANGDEC 11:00 June 01,2001
X        -0.072490
Y       170.565256
Z       -77.978219
Dia      12.697023
Cirlty                                        0.010000                   |*+++
_____________________________________________________________________________
_
      SPHERE BALL_D CART PCS11 MM ANGDEC 11:00 June 01,2001
X      -158.765255
Y      -170.893534
Z       103.434951
Dia      12.692251
Cirlty                                        0.010000                   |+*++
_____________________________________________________________________________
_
      SPHERE BALL_E CART PCS11 MM ANGDEC 11:00 June 01,2001
X       158.625637
Y      -170.914845
Z       103.328664
Dia      12.694745
Cirlty                                        0.010000                   |+*++
_____________________________________________________________________________
_
      SPHERE BALL_F CART PCS11 MM ANGDEC 11:00 June 01,2001
X        -0.146574
Y      -170.702259
Z       -77.868766
Dia      12.697002
Cirlty                                        0.010000                   |*+++
_____________________________________________________________________________
_
```

```
I           0.0000      0.0000      0.0000
J           0.0000     -0.0000      0.0000
K           0.0000      1.0000     -1.0000
_____________________________________________________________________________
_
       PLANE NEAR_BOT CART PCS11 INCH ANGDEC 10:04 June 01,2001
X           0.0001      0.8084     -0.8083      0.0000      0.0000     -0.8083
Y          -7.4827     -7.3916     -0.0911      0.0000      0.0000     -0.0911
Z          -4.2906     -4.3000      0.0094      0.0000      0.0000      0.0094
I          -0.0003      0.0000     -0.0003
J          -0.0061      0.0000     -0.0061
K          -1.0000     -1.0000      0.0000
Flat                                0.0000      0.0010                   |*+++
_____________________________________________________________________________
_
       PLANE FAR_BOT CART PCS11 INCH ANGDEC 10:04 June 01,2001
X          -0.0005      0.0178     -0.0183      0.0000      0.0000     -0.0183
Y           7.4836      7.0507      0.4329      0.0000      0.0000      0.4329
Z          -4.2865     -4.3000      0.0135      0.0000      0.0000      0.0135
I           0.0000      0.0000      0.0000
J           0.0070      0.0000      0.0070
K          -1.0000     -1.0000      0.0000
Flat                                0.0000      0.0010                   |*+++
_____________________________________________________________________________
_
       POINT NEAR_DOWN CART PCS11 INCH ANGDEC 10:04 June 01,2001
X           2.0018      2.0000      0.0018      0.0000      0.0000      0.0018
Y          -7.0496     -7.0500      0.0004      0.0000      0.0000      0.0004
Z          -4.0511     -4.0500     -0.0011      0.0000      0.0000     -0.0011
I           1.0000      1.0000     -0.0000
J          -0.0010     -0.0000     -0.0010
K           0.0025      0.0000      0.0025
_____________________________________________________________________________
_
       POINT NEAR_UP CART PCS11 INCH ANGDEC 10:04 June 01,2001
X          -1.9984     -2.0000      0.0016      0.0000      0.0000      0.0016
Y          -7.0493     -7.0500      0.0007      0.0000      0.0000      0.0007
Z          -4.0491     -4.0500      0.0009      0.0000      0.0000      0.0009
I          -1.0000     -1.0000      0.0000
J           0.0001      0.0000      0.0001
K          -0.0018      0.0000     -0.0018
_____________________________________________________________________________
_
       POINT FAR_DOWN CART PCS11 INCH ANGDEC 10:04 June 01,2001
X           1.9948      2.0000     -0.0052      0.0000      0.0000     -0.0052
Y           7.0506      7.0500      0.0006      0.0000      0.0000      0.0006
Z          -4.0511     -4.0500     -0.0011      0.0000      0.0000     -0.0011
I           1.0000      1.0000     -0.0000
J          -0.0008     -0.0000     -0.0008
K           0.0018      0.0000      0.0018
_____________________________________________________________________________
_
       POINT FAR_UP CART PCS11 INCH ANGDEC 10:04 June 01,2001
X          -2.0056     -2.0000     -0.0056      0.0000      0.0000     -0.0056
Y           7.0511      7.0500      0.0011      0.0000      0.0000      0.0011
Z          -4.0491     -4.0500      0.0009      0.0000      0.0000      0.0009
I          -1.0000     -1.0000      0.0000
J          -0.0009      0.0000     -0.0009
K          -0.0024      0.0000     -0.0024
_____________________________________________________________________________
_
      SPHERE BALL_A CART PCS11 INCH ANGDEC 10:07 June 01,2001
X           6.2377      6.2500     -0.0123      0.0000      0.0000     -0.0123
```

```
Y           6.7225      6.7227     -0.0002      0.0000      0.0000     -0.0002
Z           4.0715      4.0716     -0.0001      0.0000      0.0000     -0.0001
Dia         0.4999      0.5000     -0.0001      0.0050     -0.0050   ---*|++++
Cirlty                              0.0002      0.0004                  |+*++
_____________________________________________________________________________
_
      SPHERE BALL_B CART PCS11 INCH ANGDEC 10:07 June 01,2001
X          -6.2484     -6.2500      0.0016      0.0000      0.0000      0.0016
Y           6.7210      6.7209      0.0001      0.0000      0.0000      0.0001
Z           4.0688      4.0689     -0.0001      0.0000      0.0000     -0.0001
Dia         0.4998      0.5000     -0.0002      0.0050     -0.0050   ---*|++++
Cirlty                              0.0002      0.0004                  |++*+
_____________________________________________________________________________
_
      SPHERE BALL_C CART PCS11 INCH ANGDEC 10:07 June 01,2001
X          -0.0054      0.0000     -0.0054      0.0000      0.0000     -0.0054
Y           6.7119      6.7177     -0.0058      0.0000      0.0000     -0.0058
Z          -3.0770     -3.0784      0.0014      0.0000      0.0000      0.0014
Dia         0.4998      0.5000     -0.0002      0.0050     -0.0050   ---*|++++
Cirlty                              0.0000      0.0004                  |*+++
_____________________________________________________________________________
_
      SPHERE BALL_D CART PCS11 INCH ANGDEC 10:07 June 01,2001
X          -6.2394     -6.2500      0.0106      0.0000      0.0000      0.0106
Y          -6.7257     -6.7258      0.0001      0.0000      0.0000      0.0001
Z           4.0716      4.0718     -0.0002      0.0000      0.0000     -0.0002
Dia         0.4997      0.5000     -0.0003      0.0050     -0.0050   ---*|++++
Cirlty                              0.0003      0.0004                  |++*+
_____________________________________________________________________________
_
      SPHERE BALL_E CART PCS11 INCH ANGDEC 10:07 June 01,2001
X           6.2508      6.2500      0.0008      0.0000      0.0000      0.0008
Y          -6.7238     -6.7246      0.0008      0.0000      0.0000      0.0008
Z           4.0746      4.0747     -0.0001      0.0000      0.0000     -0.0001
Dia         0.4997      0.5000     -0.0003      0.0050     -0.0050   ---*|++++
Cirlty                              0.0003      0.0004                  |+++*
_____________________________________________________________________________
_
      SPHERE BALL_F CART PCS11 INCH ANGDEC 10:07 June 01,2001
X           0.0044      0.0000      0.0044      0.0000      0.0000      0.0044
Y          -6.7177     -6.7177     -0.0000      0.0000      0.0000     -0.0000
Z          -3.0785     -3.0784     -0.0001      0.0000      0.0000     -0.0001
Dia         0.4999      0.4999     -0.0000      0.0050     -0.0050   ---*|++++
Cirlty                              0.0001      0.0004                  |+*++
_____________________________________________________________________________
_
OUTPUT BALLS IN MM TO 6 PLACES
      SPHERE BALL_A CART PCS11 MM ANGDEC 10:07 June 01,2001
X       158.438815
Y       170.751276
Z       103.416509
Dia      12.698178
Cirlty                                          0.010000                  |+*++
_____________________________________________________________________________
_
      SPHERE BALL_B CART PCS11 MM ANGDEC 10:07 June 01,2001
X      -158.709858
Y       170.712376
Z       103.347591
Dia      12.695312
Cirlty                                          0.010000                  |++*+
_____________________________________________________________________________
_
```

```
      SPHERE BALL_C CART PCS11 MM ANGDEC 10:07 June 01,2001
X        -0.137235
Y       170.481270
Z       -78.156037
Dia      12.695131
Cirlty                                        0.010000                   |*+++
_____________________________________________________________________________
_
      SPHERE BALL_D CART PCS11 MM ANGDEC 10:07 June 01,2001
X      -158.479751
Y      -170.831894
Z       103.418575
Dia      12.691503
Cirlty                                        0.010000                   |++*+
_____________________________________________________________________________
_
      SPHERE BALL_E CART PCS11 MM ANGDEC 10:07 June 01,2001
X       158.769548
Y      -170.783413
Z       103.493872
Dia      12.693317
Cirlty                                        0.010000                   |+++*
_____________________________________________________________________________
_
      SPHERE BALL_F CART PCS11 MM ANGDEC 10:07 June 01,2001
X         0.112104
Y      -170.629645
Z       -78.193170
Dia      12.696367
Cirlty                                        0.010000                   |+*++
_____________________________________________________________________________
_
```