STEP 1

NOTE:

1. ENTER DESIRED NOMINAL STRUT LENGTH IN COLUMN "A", SUBTRACT 8.350 FROM "A" AND ENTER REMAINDER IN COLUMN "B". THIS IS THE LENGTH OF THE TUBE (ITEM 1).
2. CUT THE TUBE (ITEM 1) TO LENGTH "B" AS DETERMINED IN STEP 1, NOTE 1.
3. WELD STRUT TUBE ENDS (ITEMS 2 & 3) TO TUBE (ITEM 1).
4. ELECTROLESS NICKEL PLATE ENTIRE WELDMENT TO A PLATING THICKNESS OF .0003" MIN / .0008" MAX.

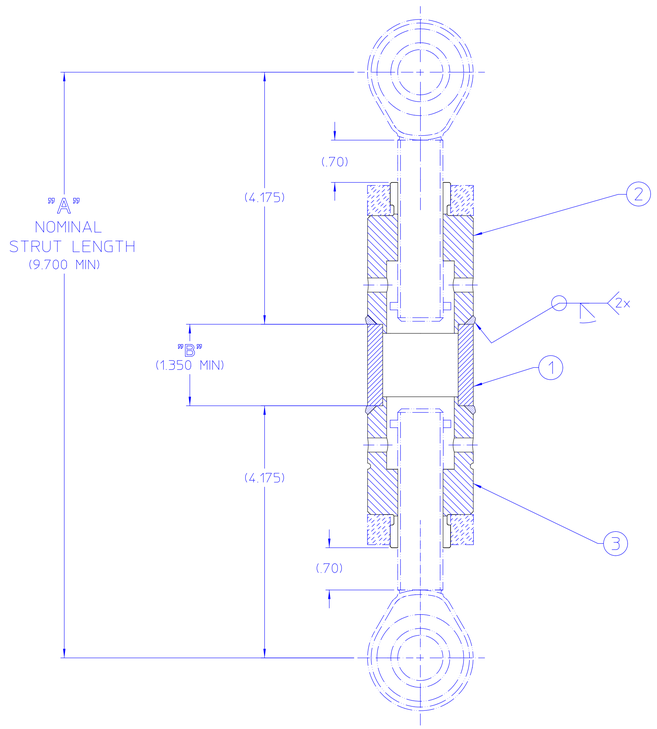

Part Number	[Nominal Strut Length] "A"	["A" minus 8.350 =] "B" ± .025	NOTES
25D8986-1	9.700	1.350	ABSOLUTE MINIMUM LENGTH
25D8986-2	15.500	7.150	ADJUSTABLE SUPPORT STAND (25F0694)
25D8986-3	14.250	5.900	SUPERBEND PS & PSS TABLE TOP
25D8986-4	32.250	23.900	SUPERBEND PS TABLE TOP
25D8986-5	35.250	26.900	SUPERBEND PS TABLE TOP
25D8986-6	43.750	35.400	SUPERBEND PSS TABLE TOP
25D8986-7	14.500	6.150	BL 5.3.1 MIRROR TANK STRUTS
25D8986-8	26.250	17.900	BL 5.3.1 MIRROR TANK STRUTS
25D8986-9	26.000	17.650	BL 5.3.1 MIRROR TANK STRUTS
25D8986-10	36.750	28.400	BL 5.0.1 MIRROR TANK STRUTS
25D8986-11	32.625	24.275	BL 5.0.1 MIRROR TANK STRUTS
25D8986-12	10.000	1.650	BL 5.0.1 & 5.0.3 MONOCHROMATOR TANK STRUTS
25D8986-13	15.000	6.650	BL 5.0.1 & 5.0.3 MONOCHROMATOR TANK STRUTS
25D8986-14	14.200	5.850	BL 8.2 M1I TANK HORIZONTAL STRUTS
25D8986-15	16.850	8.500	BL 8.2 M1 TANK VERTICAL STRUTS

STEP 2

ASSEMBLY GUIDELINES

1. ADJUSTMENT RATE = .125" CHANGE IN LENGTH PER FULL REVOLUTION OF STRUT TUBE.
   a) OVERALL ADJUSTMENT RANGE = ±1.40"
2. SPRAY COAT THREADS OF STRUT ROD ENDS (ITEMS 4 & 5) WITH ACHESON AERODAG-G LUBRICANT (ITEM 8).
3. STRUT ASSEMBLY AND TORQUE INSTRUCTIONS:

   a) THREAD ROD END - LEFT HAND THREAD (ITEM 5) INTO GROOVED END OF STRUT WELDMENT.

   b) THREAD ROD END - RIGHT HAND THREAD (ITEM 3) INTO OPPOSITE END OF STRUT WELDMENT.

   c) INSTALL SPRING PIN (ITEM 6) THROUGH STRUT STUB END HOLES INTO ROD END HOLES. CENTER SPRING PIN IN ROD END.

   d) SET STRUT ASSEMBLY TO NONIMAL STRUT LENGTH "A" WITH STRUT BODY CENTERED IN SPAN.

   e) RESTRAIN ONE ROD END FROM ROTATING WITH RESPECT TO THE STRUT TUBE.

   f) TIGHTEN CLAMP COLLAR (ITEM 7) UNTIL A TORQUE OF 8-10 ft/lbs IS REQUIRED TO ROTATE THE STRUT TUBE ABOUT THE ROD END.

   g) REPEAT e) AND f) FOR OPPOSITE ROD END.

   h) RECHECK STRUT ASSEMBLY FOR NOMINAL STRUT LENGTH "A" AND CORRECT AS NECESSARY.

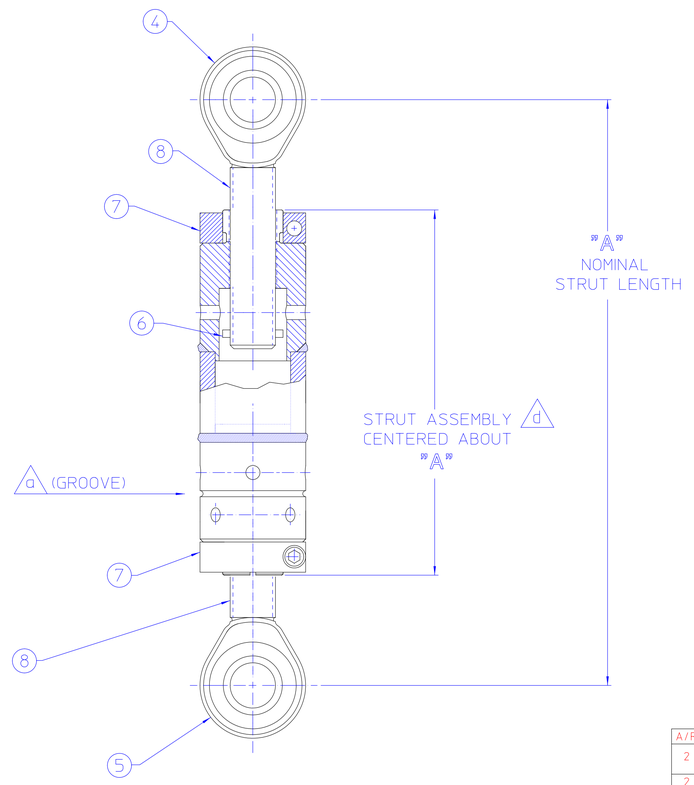

25D8986G

REQD	ITEM	PART NO	DESCRIPTION
A/R	8	-------	Acheson Aerodag-G Lubricant
2	7	7L100	Clamp Collar - Low Profile, One Piece, 1" Bore x 1.75 OD .50 Wide Stl Stafford
2	6	-------	Spring Pin - Ø1/8 x 1.0 lg McMaster Carr
1	5	25D5753	3/4" Strut Rod End - LH Fine Thread
1	4	25D5743	3/4" Strut Rod End - RH Fine Thread
1	3	25D5733	3/4" Strut Stub End - LH Thread
1	2	25D5723	3/4" Strut Stub End - RH Thread
1	1	-------	Tube, Round - 1.75" O.D. x .25 thk Wall DOM STL

REV	DWG	CHK	ZONE	DATE	CHANGES
G	al		A-7	6-21-00	ADDED 25D8986-14 & -15
F	LB		A-7	4-12-00	ADDITION OF 25D8986-12 & 13
E	PM		A-7	2-29-00	CHG. "B" DIM. OF 25D8986-10,11
D	DB		A-7	2-10-00	ADDITION OF 25D8986- 10,11
C	RHP		A-7	11-22-99	ADDITION OF 25D8986-7, 8, & 9
B	CLC		A-7	11-2-99	ADDITION OF 25D8986-3, 4, 5 & 6
A	NBS		A-7	9-29-99	ADD 15.50 center to center

UNLESS OTHERWISE SPECIFIED
TOLERANCES: X ± FRAC. ± ; XX ± ANGLES ± ; XXX ± FINISH √
THREADS ARE CLASS 2
CHAMFER ENDS OF ALL SCREW THREADS 30° OR 1.5 PITCH THRD RELIEF WITH ROUND NOSE TOOL ON MACHINE CUT THREADS.
BREAK EDGES .016 MAX. ON MACHINED WORK.
REMOVE BURRS WELD SPLATTER & LOOSE SCALE
REFERENCES: ASME Y14.5M - 1994.

SHOP ORDERS
ACCT. NO. | SERIAL NO.
DATE ISSD | DATE REQD. | NO. REQD.
DELIVER TO
SURFACE TREATMENT
IDENT METH. TAG
DWG BY: lim | DATE 08/27/99
CHK BY: T LAURITZEN | DATE 08/27/99

LAWRENCE BERKELEY LABORATORY
UNIVERSITY OF CALIFORNIA-BERKELEY
ALS - BEAMLINES
MOUNTING & SUPPORT EQUIPMENT
3/4" BASIC TURNBUCKLE STRUT

PATENT CLEAR | DWG. TYPE C'ASSY | SHOWN ON | SCALE NONE | DO NOT SCALE PRINTS
MICROFILMED | DESIGN ACCT. NO. | CATEGORY CODE AL2012 | DWG. NO. 25D8986 | SIZE | REV. G

REQ	PART NUMBER	DESCRIPTION
	MM-12D-27	Male Rod End, .750" Bore, 3/4-16UNF-3A, Steel, Aurora Bearing Co

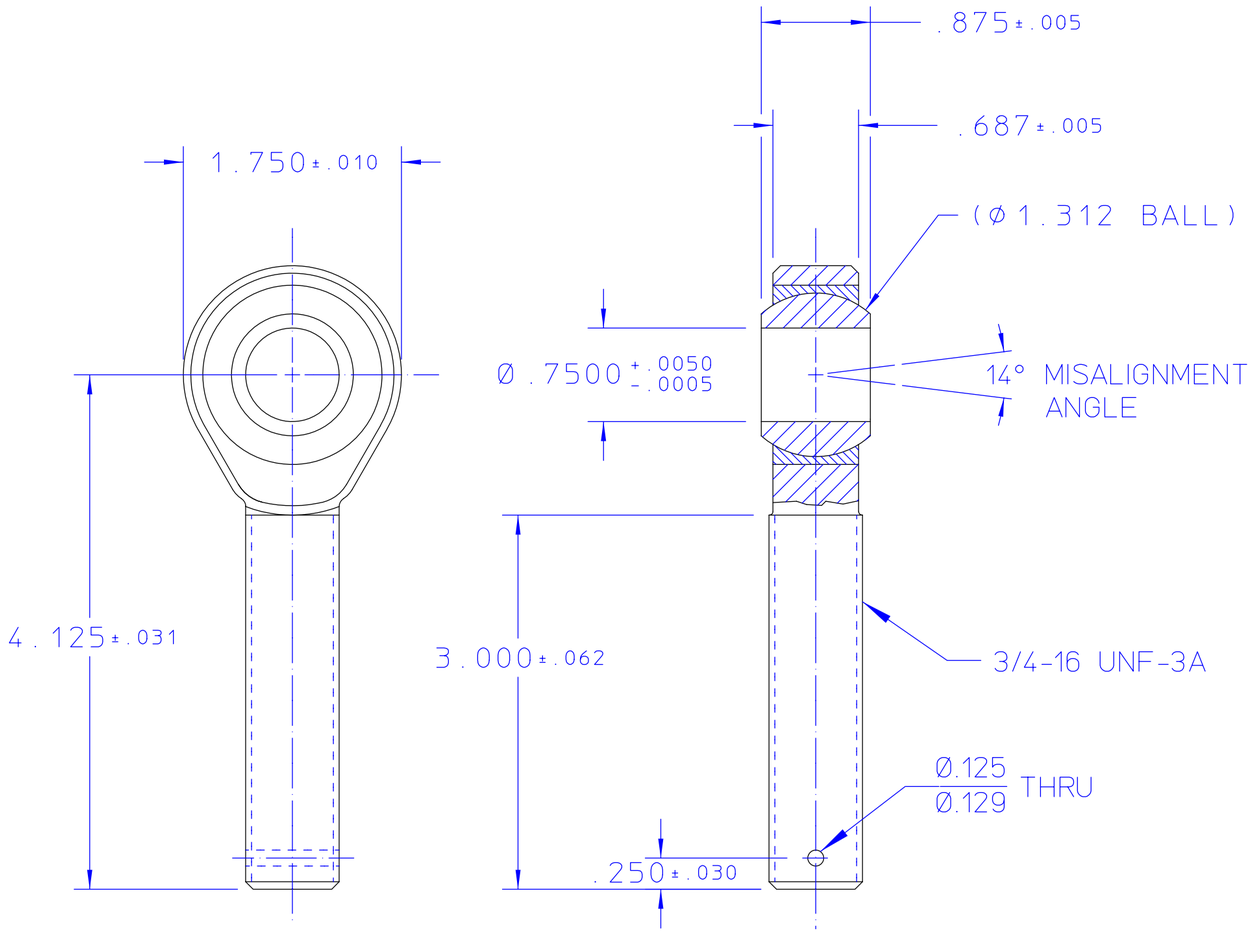

SPECIFICATIONS:

BODY: CARBON STEEL
PROTECTIVE COATED FOR CORROSION RESISTANCE.
SOLID SHANK, NO LUBRICATION FITTING.

RACE: CARBON STEEL, PROTECTIVE COATED FOR CORROSION RESISTANCE. SOLID OR DRY FILM LUBRICANT ON INSIDE DIAMETER.

BALL: ALLOY STEEL, HEAT TREATED
HARD CHROME PLATED

PRELOAD: THIS ROD END BEARING MUST BE MANUFACTURED WITH A PRELOAD IN ORDER TO ELIMINATE ALL CLEARANCE AND TO INSURE A TIGHT FIT BETWEEN THE BEARING BALL AND ITS OUTER RACE. NORMALLY THE ROD END BEARING WILL BE USED IN A STATIC CONDITION. THE BALL WILL ONLY OCCASIONALLY MOVE WITH RESPECT TO ITS OUTER RACE. DUE TO THE NORMAL STATIC CONDITION OF THE BEARING, THE TORQUE REQUIRED TO MOVE THE BALL IS REFERRED TO AS "BREAKAWAY TORQUE".

25D5743A

THE SPECIFIED BREAKAWAY TORQUE CRITERIA SHALL BE MET AFTER OSCILLATING THE BALL THROUGH ITS TOTAL MISALIGNMENT CONE A MINIMUM OF 10 FULL CYCLES.

ROD END BEARINGS FALLING OUTSIDE THE SPECIFIED BREAKAWAY TORQUE RANGE WILL NOT BE ACCEPTED.

(A) RADIAL STATIC LOAD CAPACITY: 10,000 LBS.

SPECIFIED BREAKAWAY TORQUE RANGE: 10 TO 100 INCH/POUNDS

REV	DWG	CHK	ZONE	DATE	CHANGES
A			2/A	9/1/99	WAS: ULTIMATE RADIAL STATIC LOAD CAPACITY 10,000lbs MIN

UNLESS OTHERWISE SPECIFIED

TOLERANCES			
	.X ±	FRAC. ±	
	.XX ±	ANGLES ±	
	.XXX ±	FINISH √	

CHAMFER ENDS OF ALL SCREW THREADS 30°.
CUT 1.5 PITCH THRD RELIEF WITH ROUND NOSE TOOL ON MACHINE CUT THREADS.
BREAK EDGES .016 MAX. ON MACHINED WORK
REMOVE BURRS WELD SPLATTER & LOOSE SCALE
REFERENCES: ANSI Y14.5 & B46.1.

SHOP ORDERS

ACCT. NO.	SERIAL NO.	
DATE ISSD	DATE REQD.	NO. REQD.
DELIVER TO		
SURFACE TREATMENT		
IDENT. METH.		
DWG. BY lim		DATE 06/01/99
CHK. BY T. LAURITZEN		DATE 06/01/99

LAWRENCE BERKELEY LABORATORY
UNIVERSITY OF CALIFORNIA-BERKELEY
ALS - BEAMLINES
MOUNTING & SUPPORT EQUIPMENT
3/4" STRUT ROD END - RH FINE THREAD

PATENT CLEAR	DWG. TYPE	SHOWN ON	SCALE	DO NOT SCALE PRINTS
	CDET	25D8986	1/1	
MICROFILMED	DESIGN ACCT. NO.	CATEGORY CODE	DWG. NO.	SIZE / REV.
		AL2012	25D5743	A

REQ	ITEM	PART NUMBER	DESCRIPTION
		-----	BAR - ROUND Ø1.75 1018 CRS

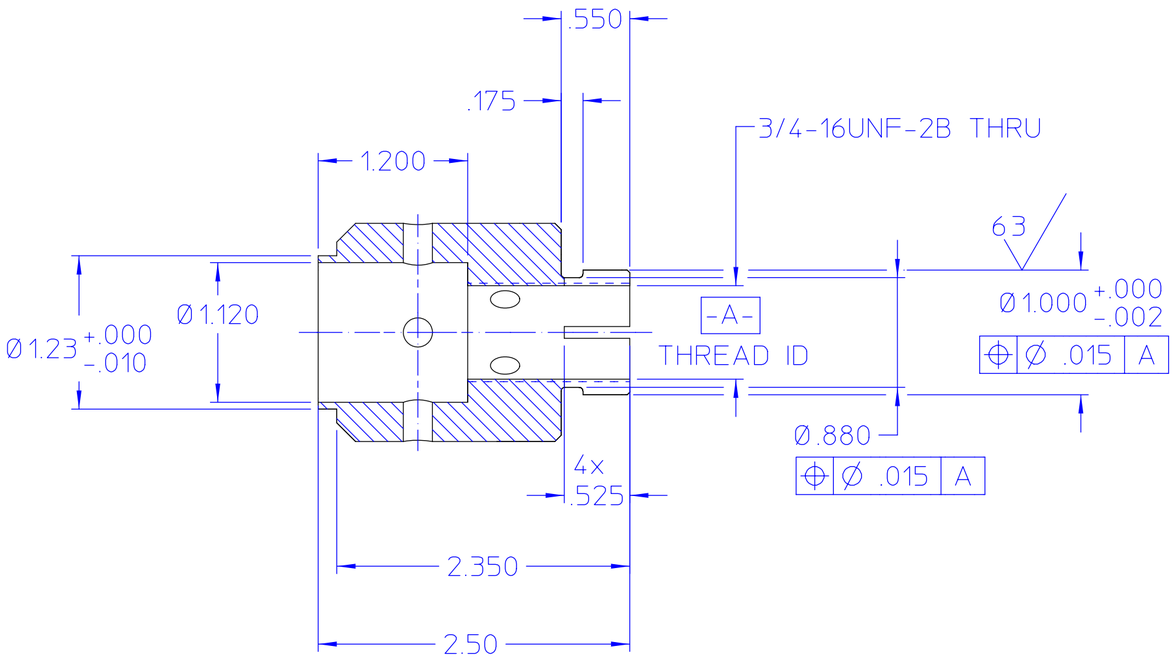

SECTION A - A

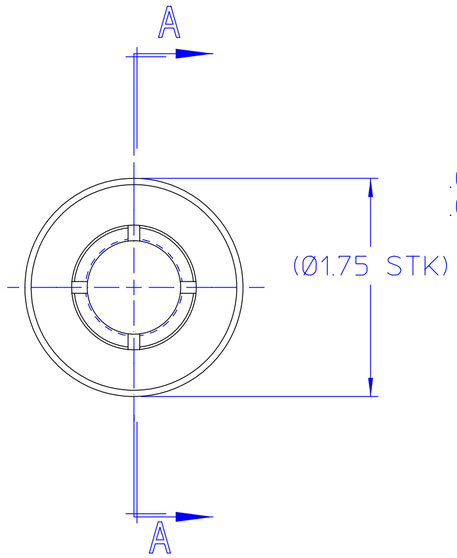

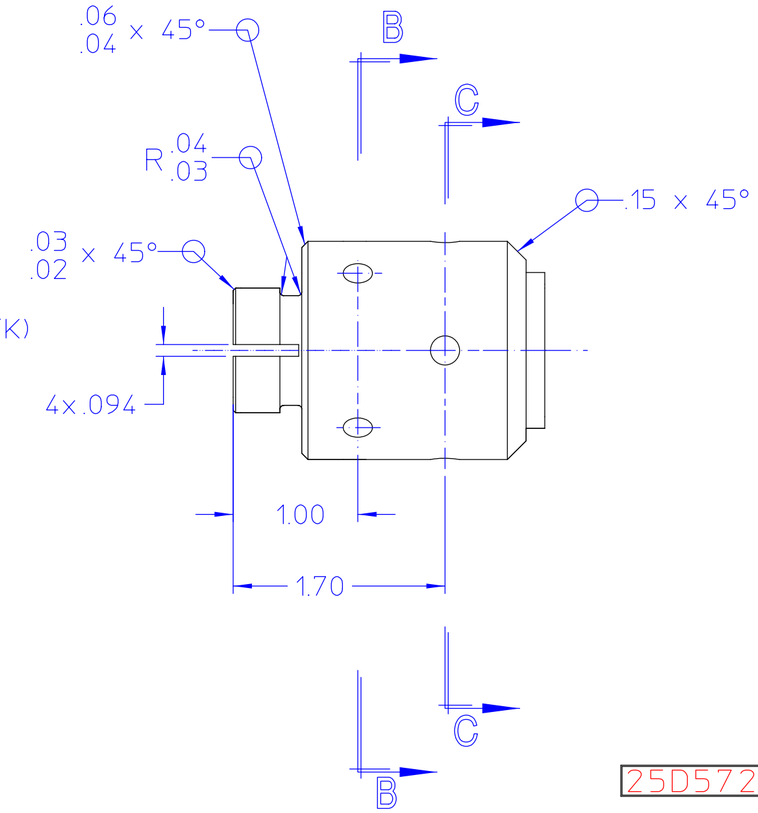

25D5723-

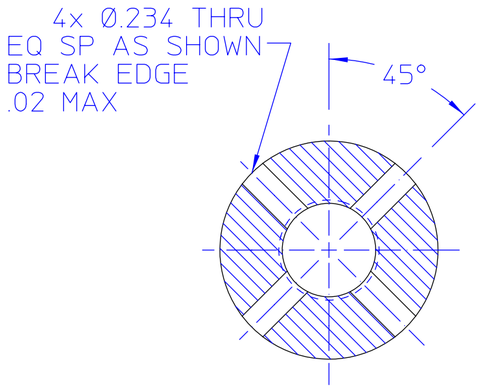

SECTION B - B

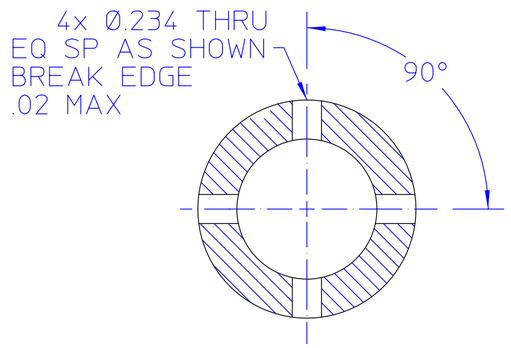

SECTION C - C

REV	DWG	CHK	ZONE	DATE	CHANGES

UNLESS OTHERWISE SPECIFIED

TOLERANCES			
	.X ± .1	FRAC. ±	
	.XX ± .03	ANGLES ±1/2°	
	.XXX ± .010	FINISH 125√	

THREADS ARE CLASS 2
CHAMFER ENDS OF ALL SCREW THREADS 30°.
CUT 1.5 PITCH THRD RELIEF WITH ROUND NOSE TOOL ON MACHINE CUT THREADS.
BREAK EDGES .016 MAX. ON MACHINED WORK
REMOVE BURRS WELD SPLATTER & LOOSE SCALE
REFERENCES: ANSI Y14.5M - 1994

SHOP ORDERS

ACCT. NO.	SERIAL NO.	
DATE ISSD	DATE REQD.	NO. REQD.
DELIVER TO		
SURFACE TREATMENT	DEGREASE	
IDENT. METH.		
DWG. BY	lim	DATE 04/05/99
CHK. BY	T LAURITZEN	DATE 04/05/99

LAWRENCE BERKELEY LABORATORY
UNIVERSITY OF CALIFORNIA-BERKELEY

ALS - BEAMLINES

MOUNTING & SUPPORT EQUIPMENT

STRUT STUB END - RH THREAD (3/4-16UNF)

PATENT CLEAR	DWG. TYPE	SHOWN ON	SCALE	DO NOT SCALE PRINTS
	CDET	25D8986	1/1	
MICROFILMED	DESIGN ACCT. NO.	CATEGORY CODE	DWG. NO.	SIZE / REV.
		AL2012	25D5723	-

REQ	PART NUMBER	DESCRIPTION
	MB-12D-27	Male Rod End, .750" Bore, 3/4-16UNF-3A LEFT HAND THREAD Steel, Aurora Bearing Company

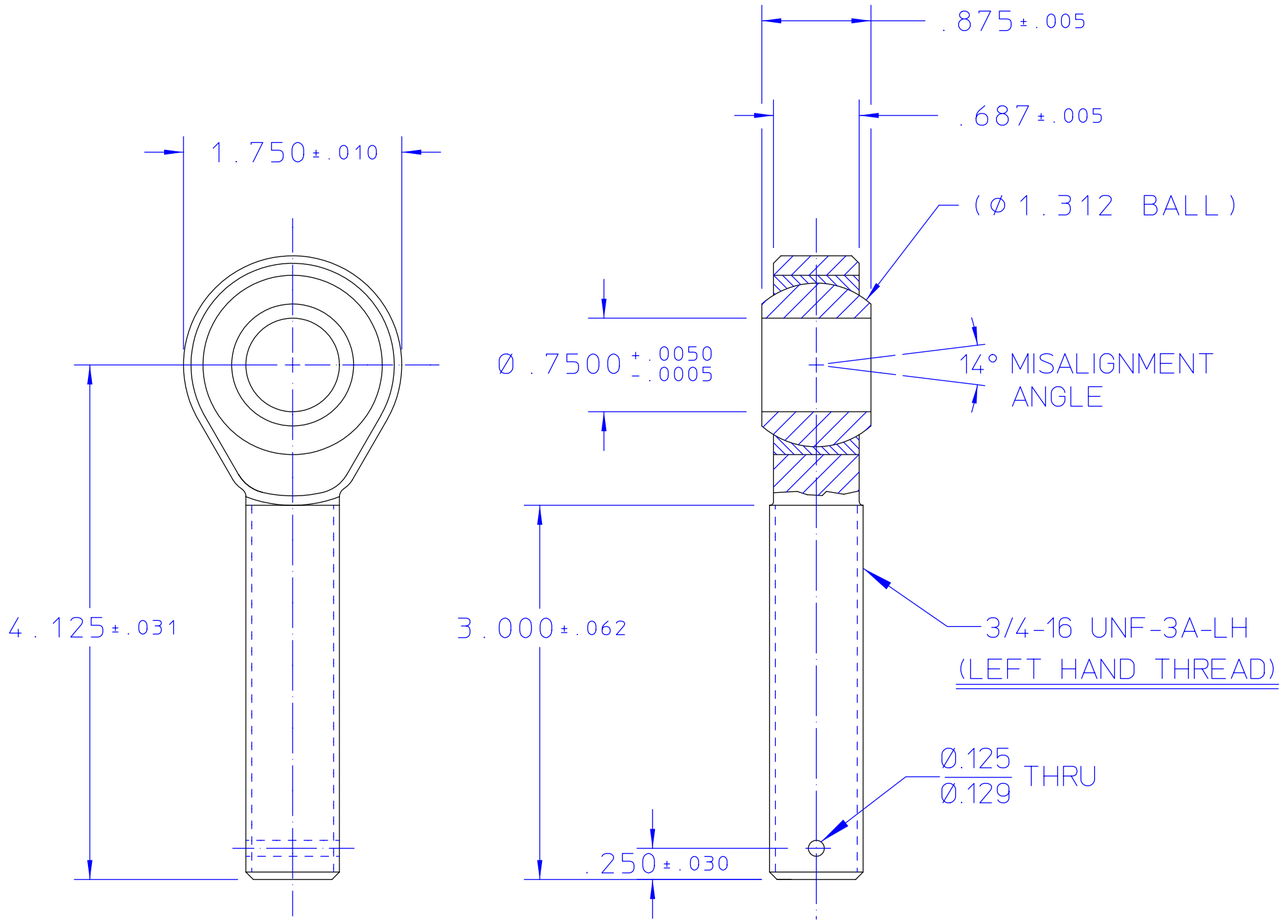

SPECIFICATIONS:

BODY: CARBON STEEL
PROTECTIVE COATED FOR CORROSION RESISTANCE.
SOLID SHANK, NO LUBRICATION FITTING.

RACE: CARBON STEEL, PROTECTIVE COATED FOR CORROSION RESISTANCE. SOLID OR DRY FILM LUBRICANT ON INSIDE DIAMETER.

BALL: ALLOY STEEL, HEAT TREATED
HARD CHROME PLATED

PRELOAD: THIS ROD END BEARING MUST BE MANUFACTURED WITH A PRELOAD IN ORDER TO ELIMINATE ALL CLEARANCE AND TO INSURE A TIGHT FIT BETWEEN THE BEARING BALL AND ITS OUTER RACE. NORMALLY THE ROD END BEARING WILL BE USED IN A STATIC CONDITION. THE BALL WILL ONLY OCCASIONALLY MOVE WITH RESPECT TO ITS OUTER RACE. DUE TO THE NORMAL STATIC CONDITION OF THE BEARING, THE TORQUE REQUIRED TO MOVE THE BALL IS REFERRED TO AS "BREAKAWAY TORQUE".

25D5753A

THE SPECIFIED BREAKAWAY TORQUE CRITERIA SHALL BE MET AFTER OSCILLATING THE BALL THROUGH ITS TOTAL MISALIGNMENT CONE A MINIMUM OF 10 FULL CYCLES.

ROD END BEARINGS FALLING OUTSIDE THE SPECIFIED BREAKAWAY TORQUE RANGE WILL NOT BE ACCEPTED.

(A) RADIAL STATIC LOAD CAPACITY: 10,000 LBS.

SPECIFIED BREAKAWAY TORQUE RANGE: 10 TO 100 INCH/POUNDS

REV	DWG	CHK	ZONE	DATE	CHANGES
A			2/B	9/1/99	WAS: ULTIMATE RADIAL STATIC LOAD CAPACITY: 10,000 lbs MIN.

UNLESS OTHERWISE SPECIFIED

TOLERANCES			
	.X ±	FRAC. ±	
	.XX ±	ANGLES ±	
	.XXX ±	FINISH √	

CHAMFER ENDS OF ALL SCREW THREADS 30°.
CUT 1.5 PITCH THRD RELIEF WITH ROUND NOSE TOOL ON MACHINE CUT THREADS.
BREAK EDGES .016 MAX. ON MACHINED WORK
REMOVE BURRS WELD SPLATTER & LOOSE SCALE
REFERENCES: ANSI Y14.5 & B46.1.

SHOP ORDERS

ACCT. NO.		SERIAL NO.
DATE ISSD	DATE REQD.	NO. REQD.
DELIVER TO		
SURFACE TREATMENT		
IDENT. METH.		
DWG. BY lim		DATE 06/01/99
CHK. BY T. LAURITZEN		DATE 06/01/99

LAWRENCE BERKELEY LABORATORY
UNIVERSITY OF CALIFORNIA-BERKELEY

ALS - BEAMLINES
MOUNTING & SUPPORT EQUIPMENT
3/4" STRUT ROD END - LH FINE THREAD

PATENT CLEAR	DWG. TYPE	SHOWN ON	SCALE	DO NOT SCALE PRINTS
	CDET	25D8986	1/1	
MICROFILMED	DESIGN ACCT. NO.	CATEGORY CODE	DWG. NO.	SIZE / REV.
		AL2012	25D5753	A

REQ	ITEM	PART NUMBER	DESCRIPTION
		-----	BAR - ROUND Ø1.75 1018 CRS

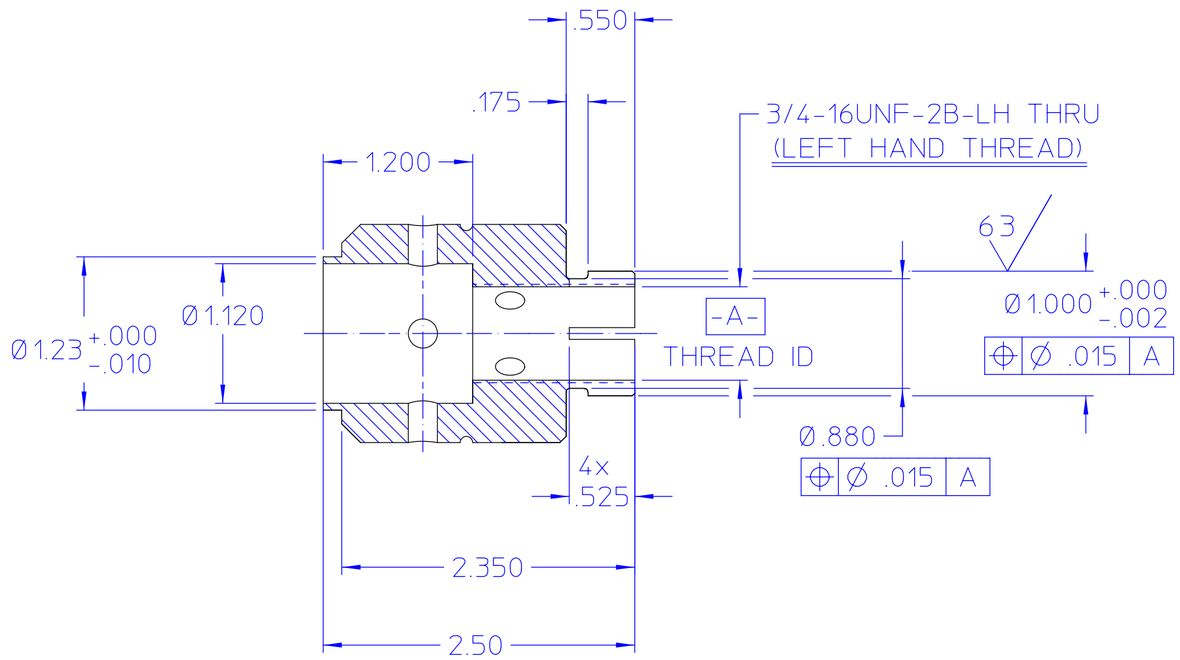

SECTION A - A

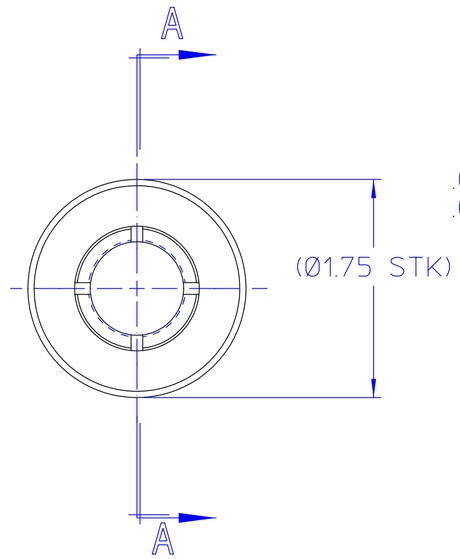

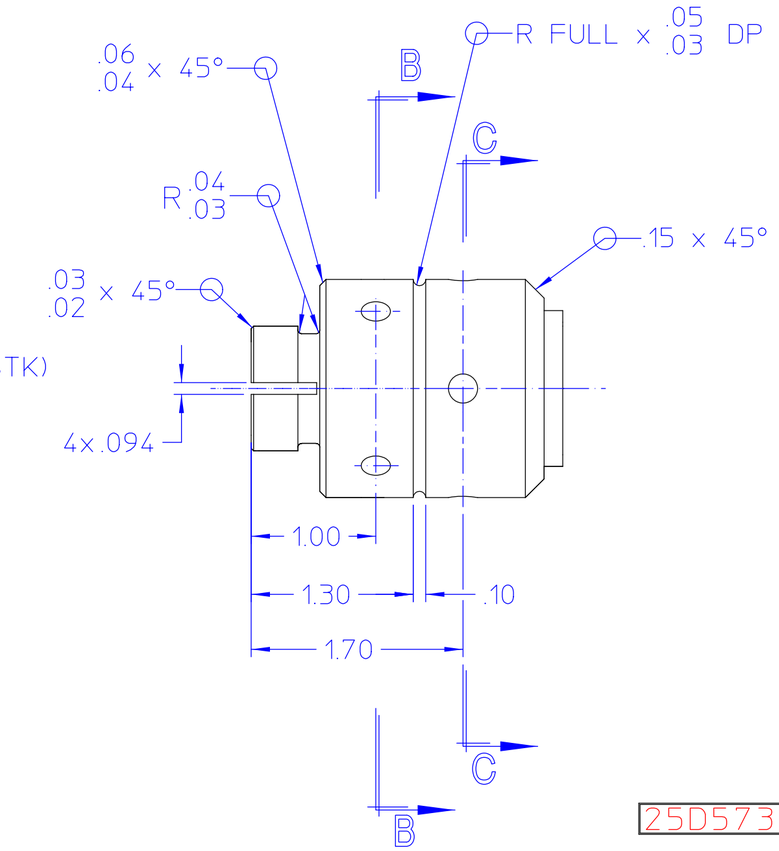

25D5733-

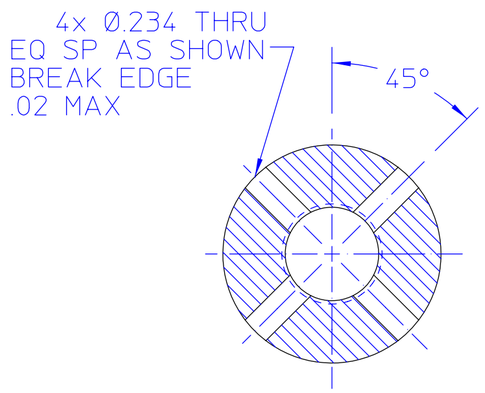

SECTION B - B

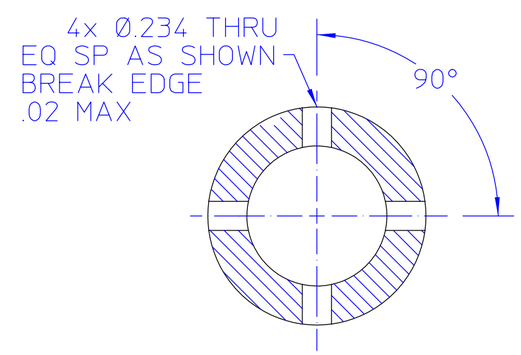

SECTION C - C

REV	DWG	CHK	ZONE	DATE	CHANGES

UNLESS OTHERWISE SPECIFIED

TOLERANCES			
	.X ± .1	FRAC. ±	
	.XX ± .03	ANGLES ±1/2°	
	.XXX ± .010	FINISH 125√	

THREADS ARE CLASS 2
CHAMFER ENDS OF ALL SCREW THREADS 30°.
CUT 1.5 PITCH THRD RELIEF WITH ROUND NOSE TOOL ON MACHINE CUT THREADS.
BREAK EDGES .016 MAX. ON MACHINED WORK
REMOVE BURRS WELD SPLATTER & LOOSE SCALE
REFERENCES: ANSI Y14.5M - 1994

SHOP ORDERS

ACCT. NO.	SERIAL NO.	
DATE ISSD	DATE REQD.	NO. REQD.
DELIVER TO		
SURFACE TREATMENT	DEGREASE	
IDENT. METH.		
DWG. BY	lim	DATE 04/05/99
CHK. BY	T LAURITZEN	DATE 04/05/99

LAWRENCE BERKELEY LABORATORY
UNIVERSITY OF CALIFORNIA-BERKELEY

ALS - BEAMLINES

MOUNTING & SUPPORT EQUIPMENT

STRUT STUB END - LH THREAD (3/4-16UNF)

PATENT CLEAR	DWG. TYPE	SHOWN ON	SCALE	DO NOT SCALE PRINTS
	CDET	25D8986	1/1	
MICROFILMED	DESIGN ACCT. NO.	CATEGORY CODE	DWG. NO.	SIZE / REV.
		AL2012	25D5733	-