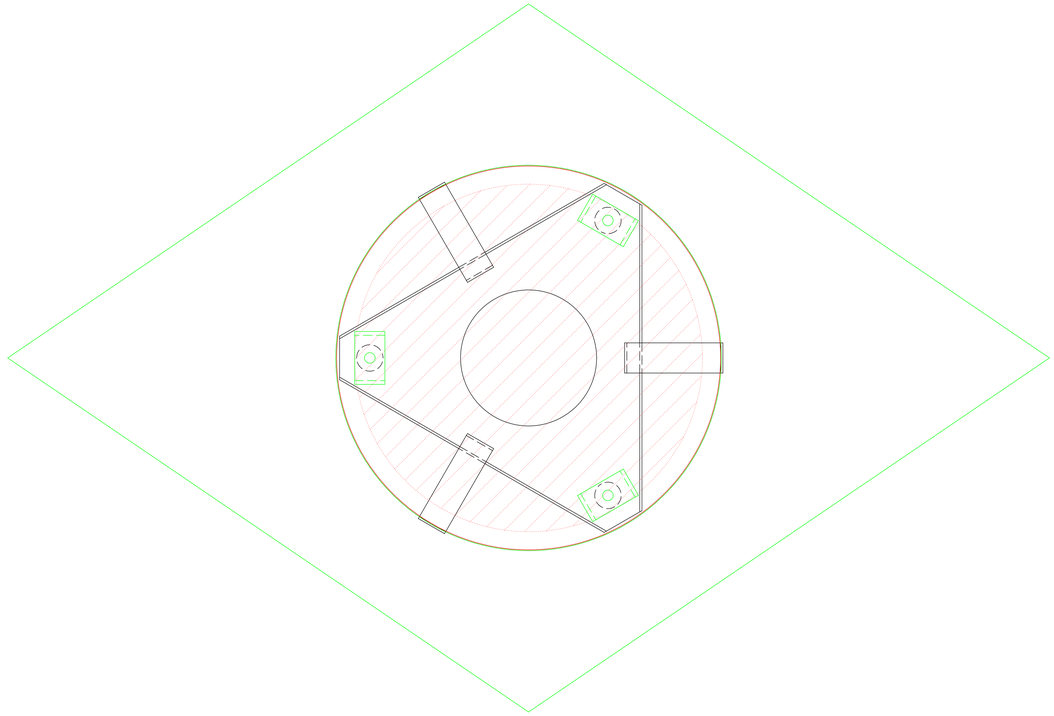

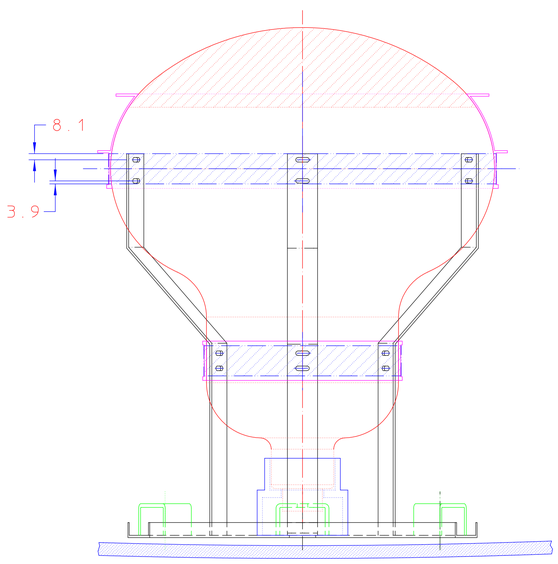
8.1
3.9

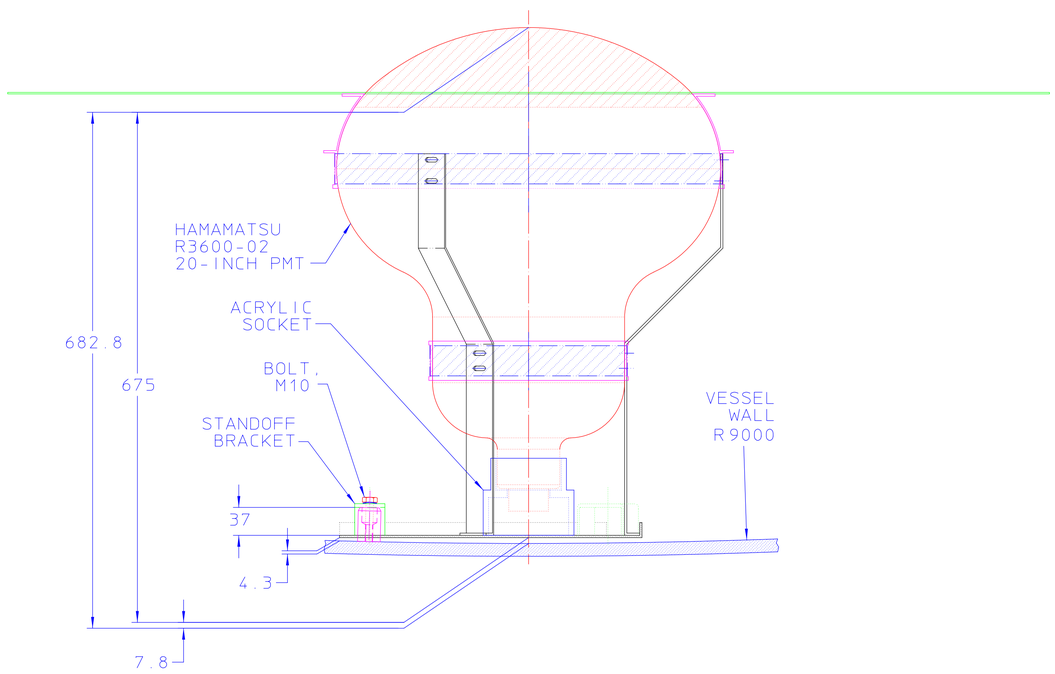
HAMAMATSU
R3600-02
20-INCH PMT
ACRYLIC
SOCKET
BOLT,
M10
STANDOFF
BRACKET
682.8
675
37
4.3
7.8
VESSEL
WALL
R9000

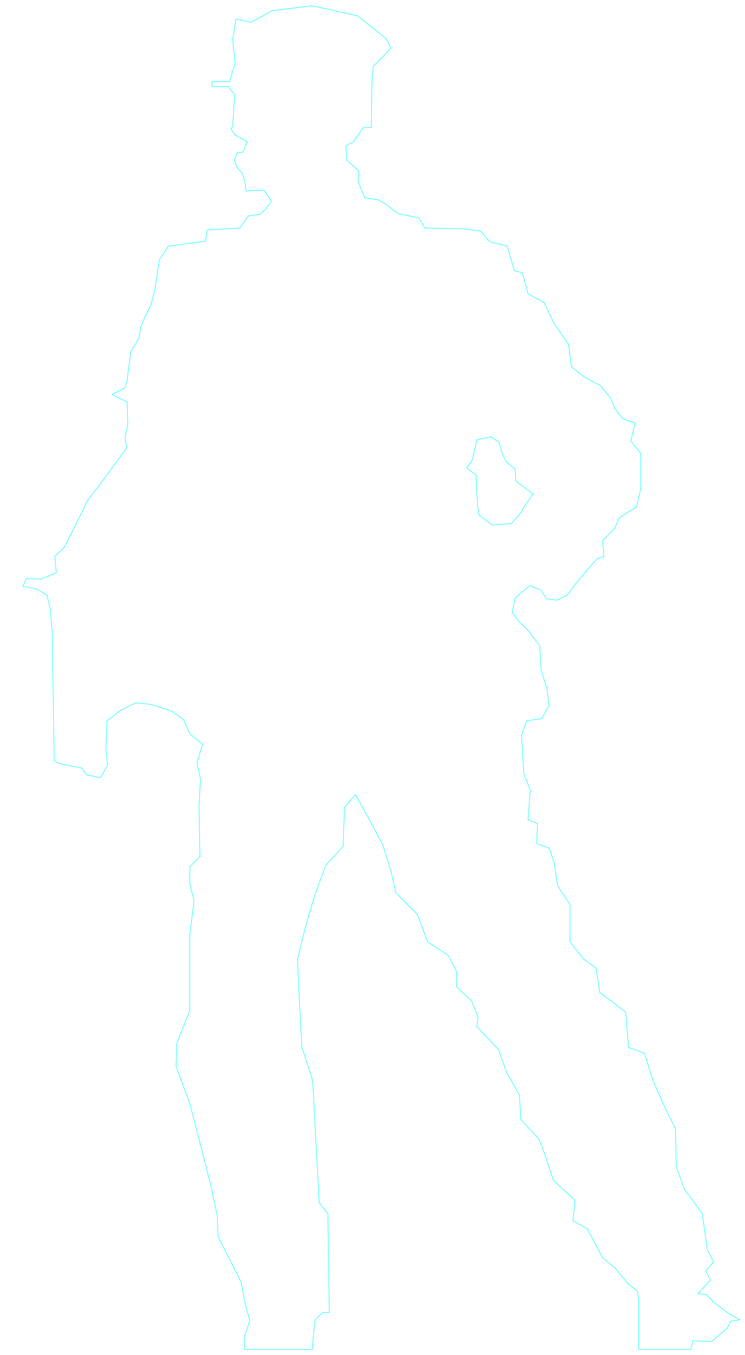

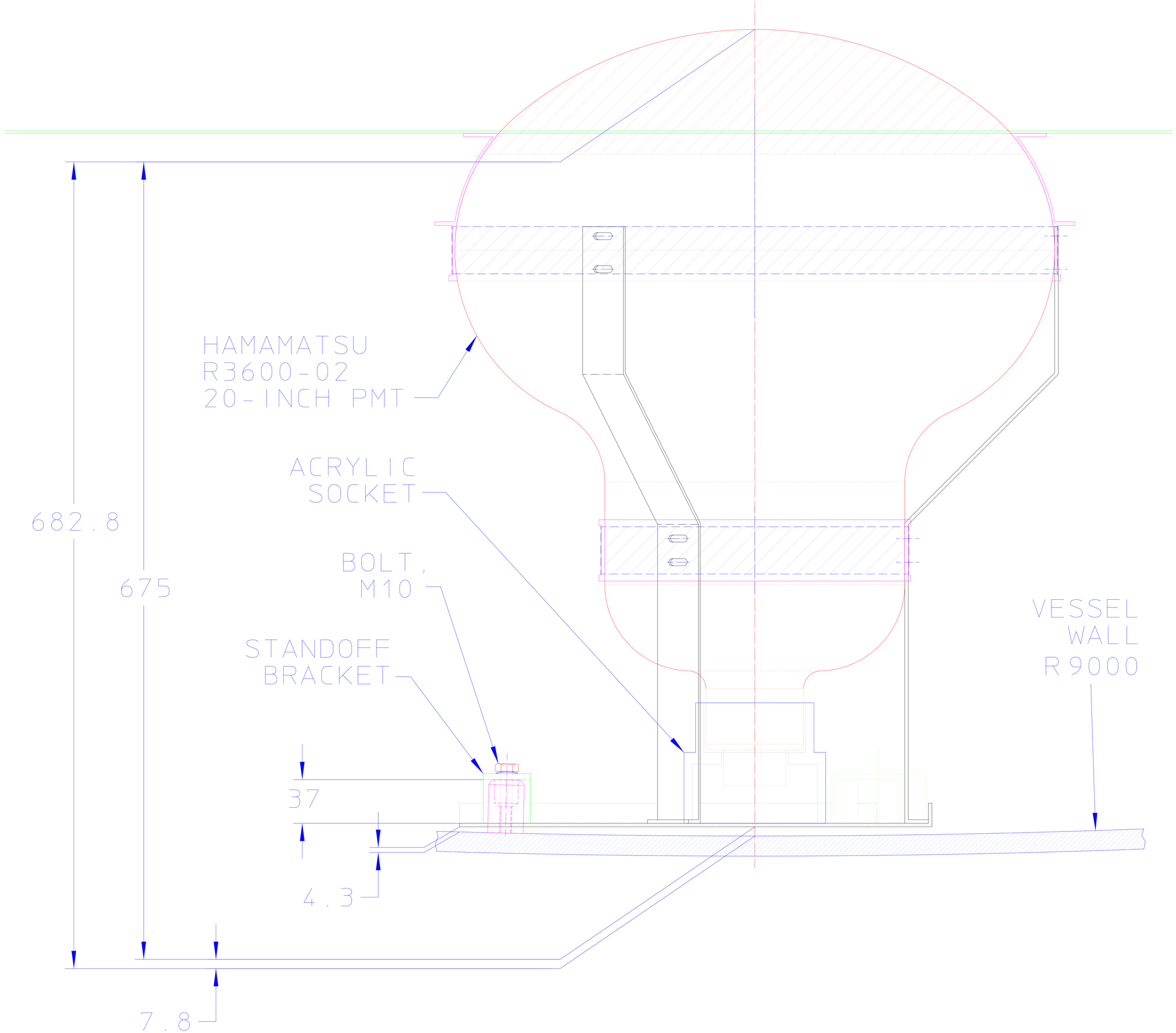
HAMAMATSU
R3600-02
20-INCH PMT
ACRYLIC
SOCKET
BOLT,
M10
STANDOFF
BRACKET
VESSEL
WALL
R9000
682.8
675
37
4.3
7.8

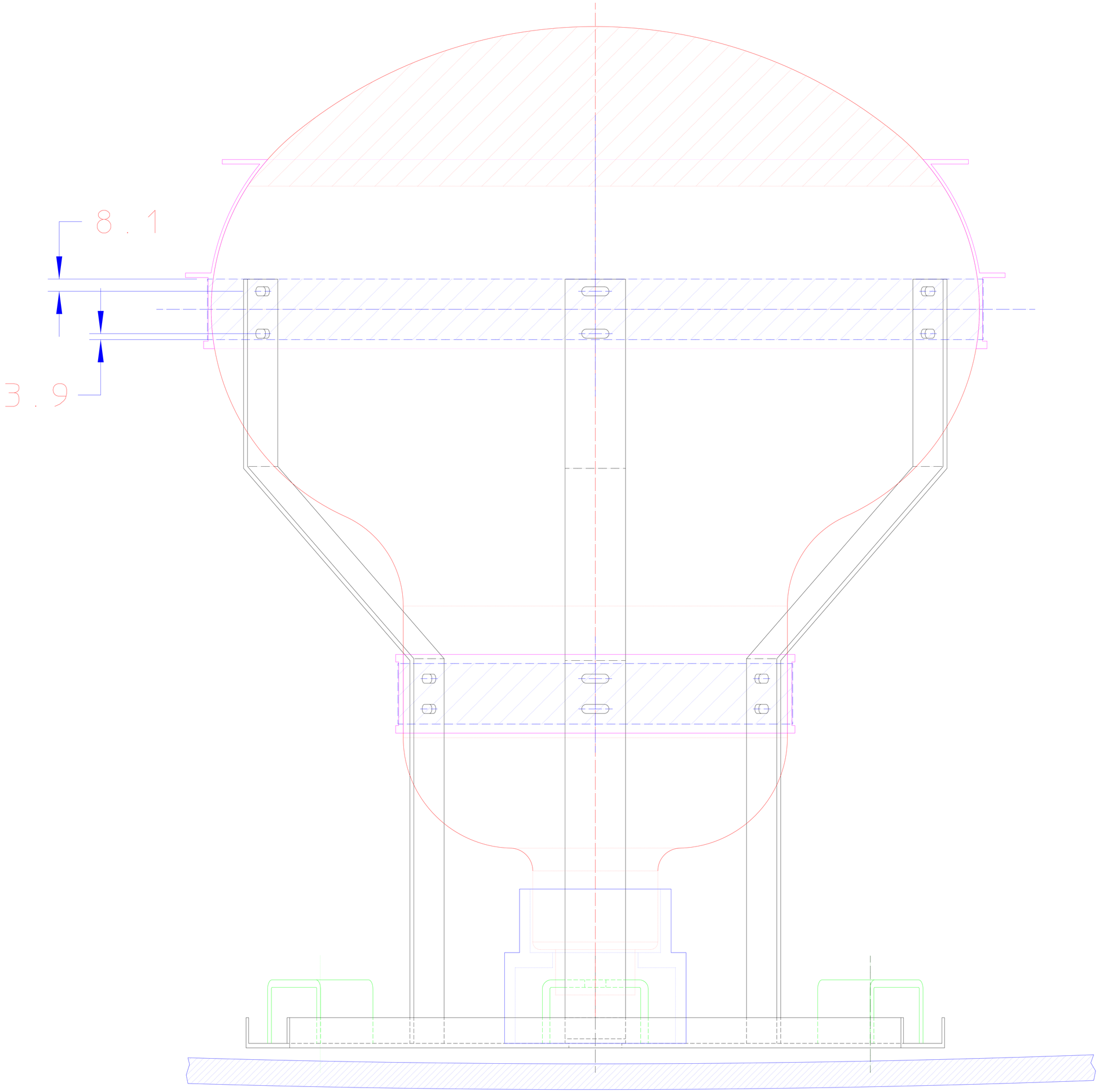
8.1
3.9

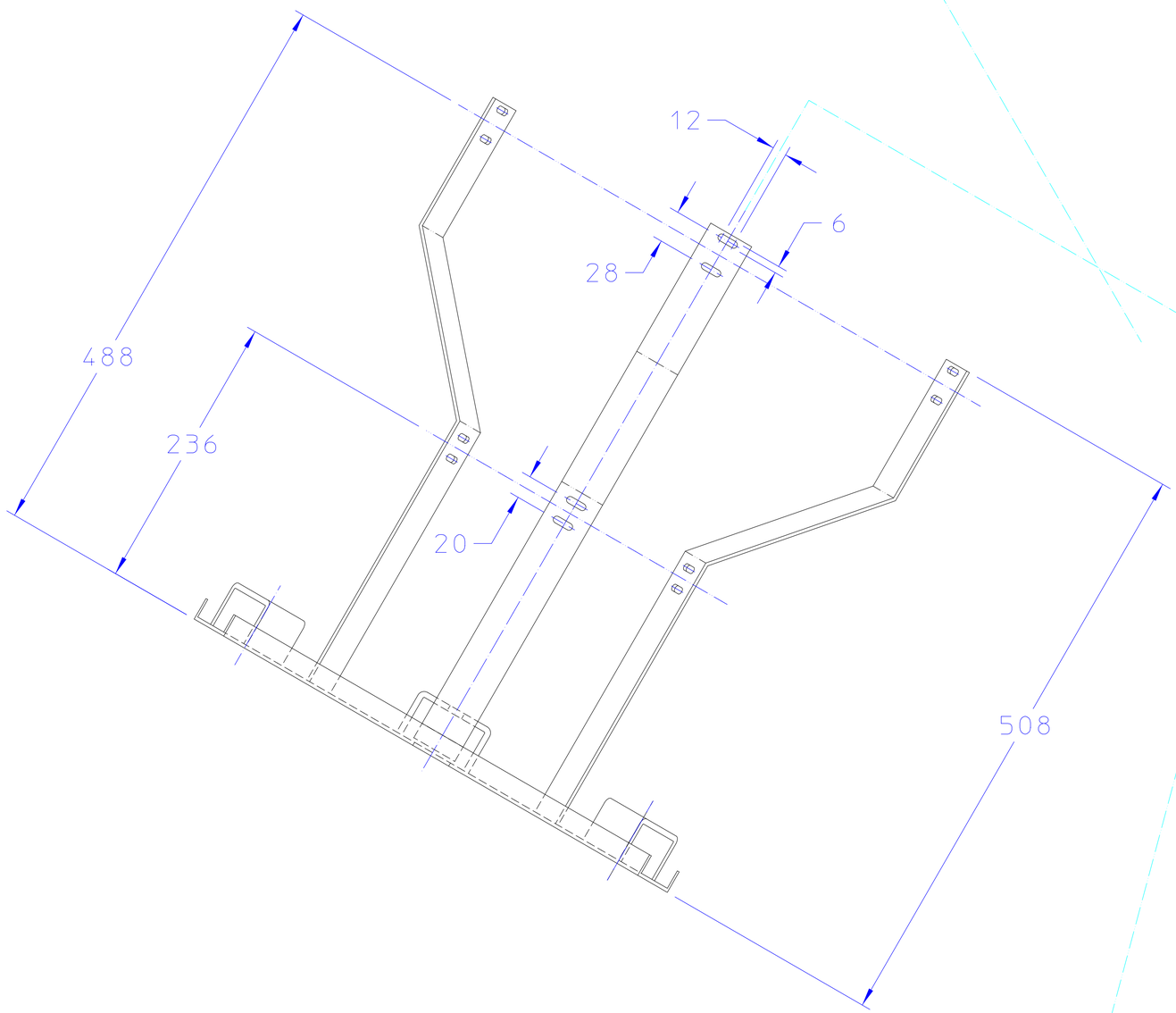
12
6
28
488
236
20
508

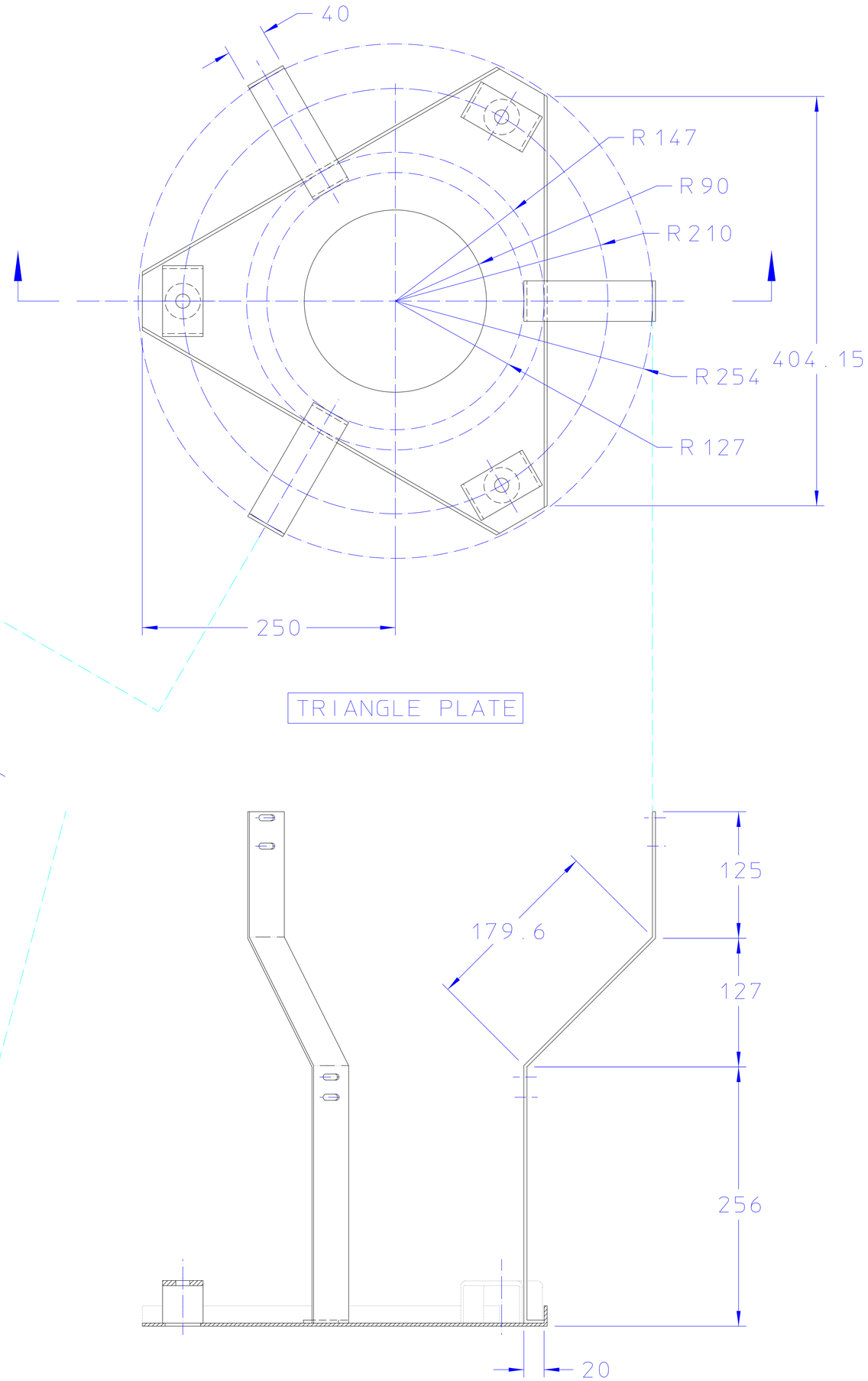
40
R 147
R 90
R 210
R 254
R 127
404.15
250
TRIANGLE PLATE
125
179.6
127
256
20

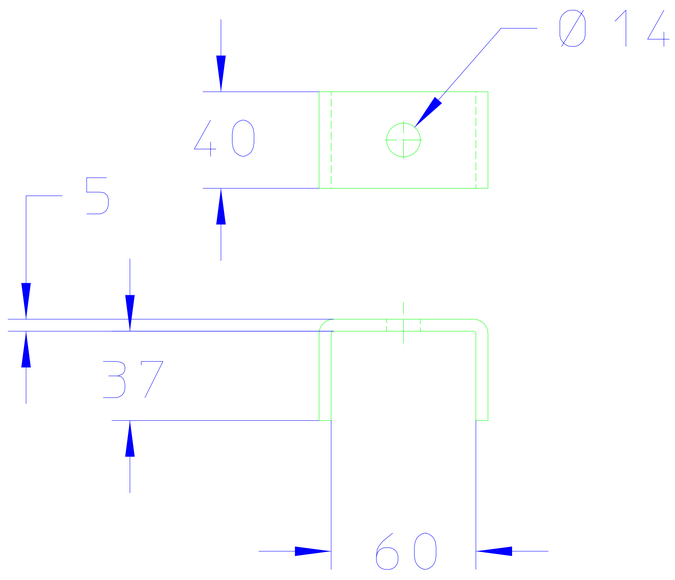

STANDOFF BRACKET

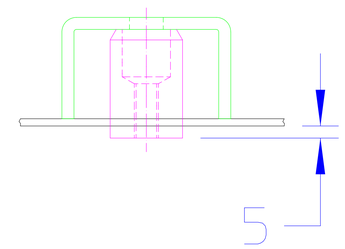

THEORETICAL
STANDOFF
DISTANCE

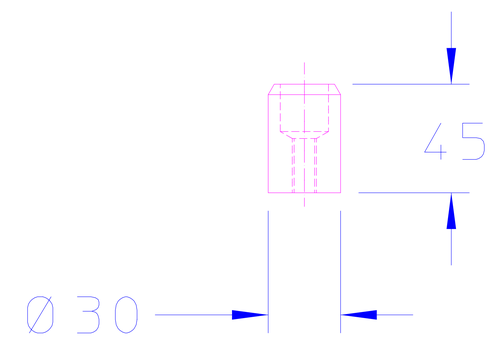

STANDOFF

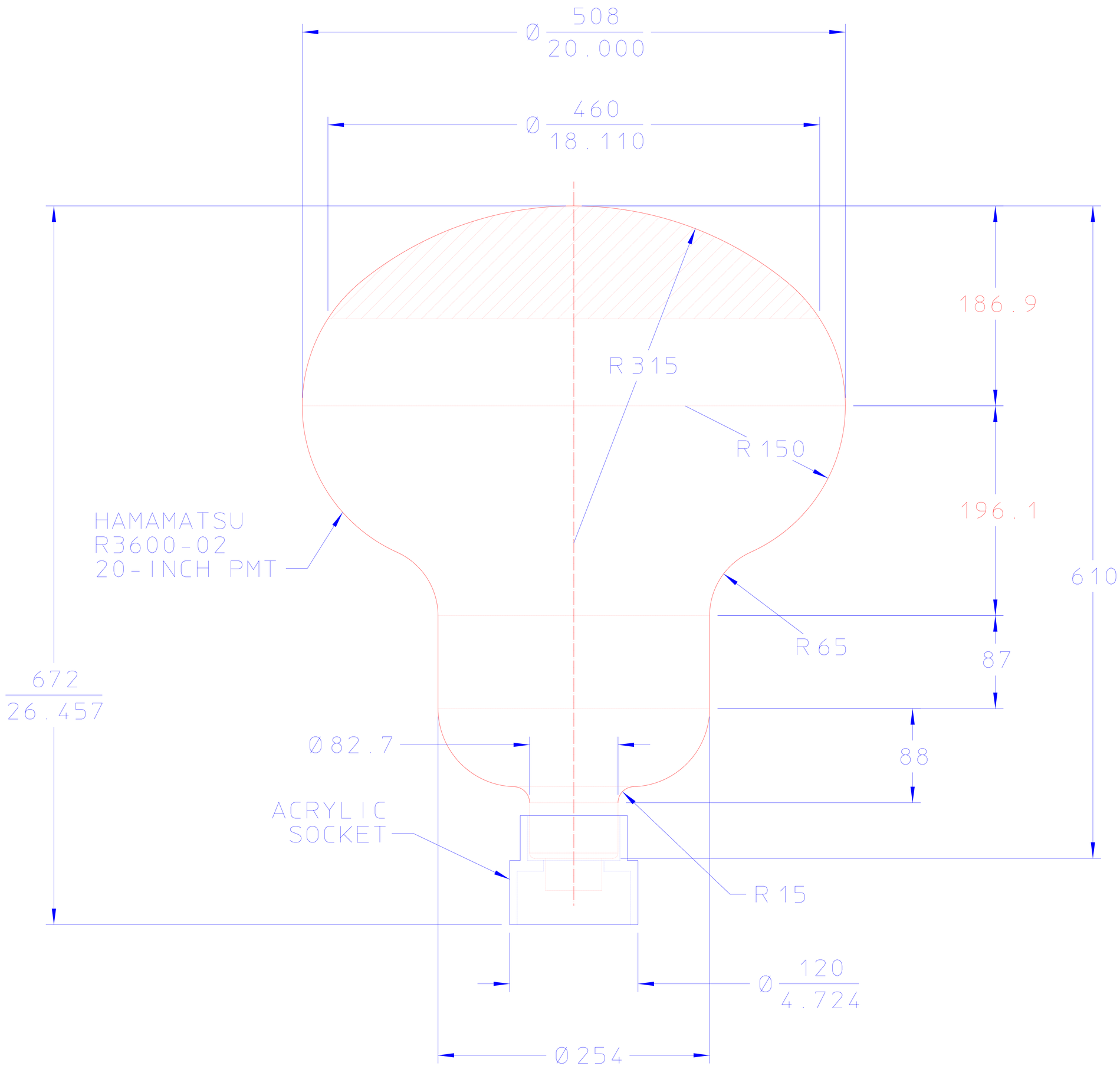
Ø 508
20.000
Ø 460
18.110
186.9
R 315
R 150
196.1
HAMAMATSU
R3600-02
20-INCH PMT
610
R 65
87
672
26.457
Ø 82.7
88
ACRYLIC
SOCKET
R 15
Ø 120
4.724
Ø 254

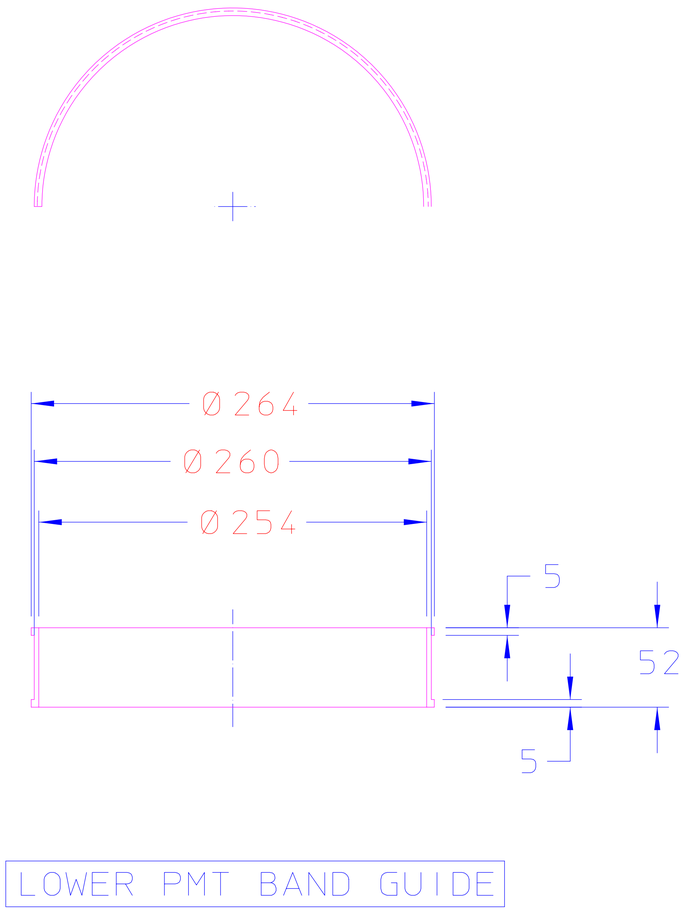
Ø 264
Ø 260
Ø 254
5
52
5
LOWER PMT BAND GUIDE

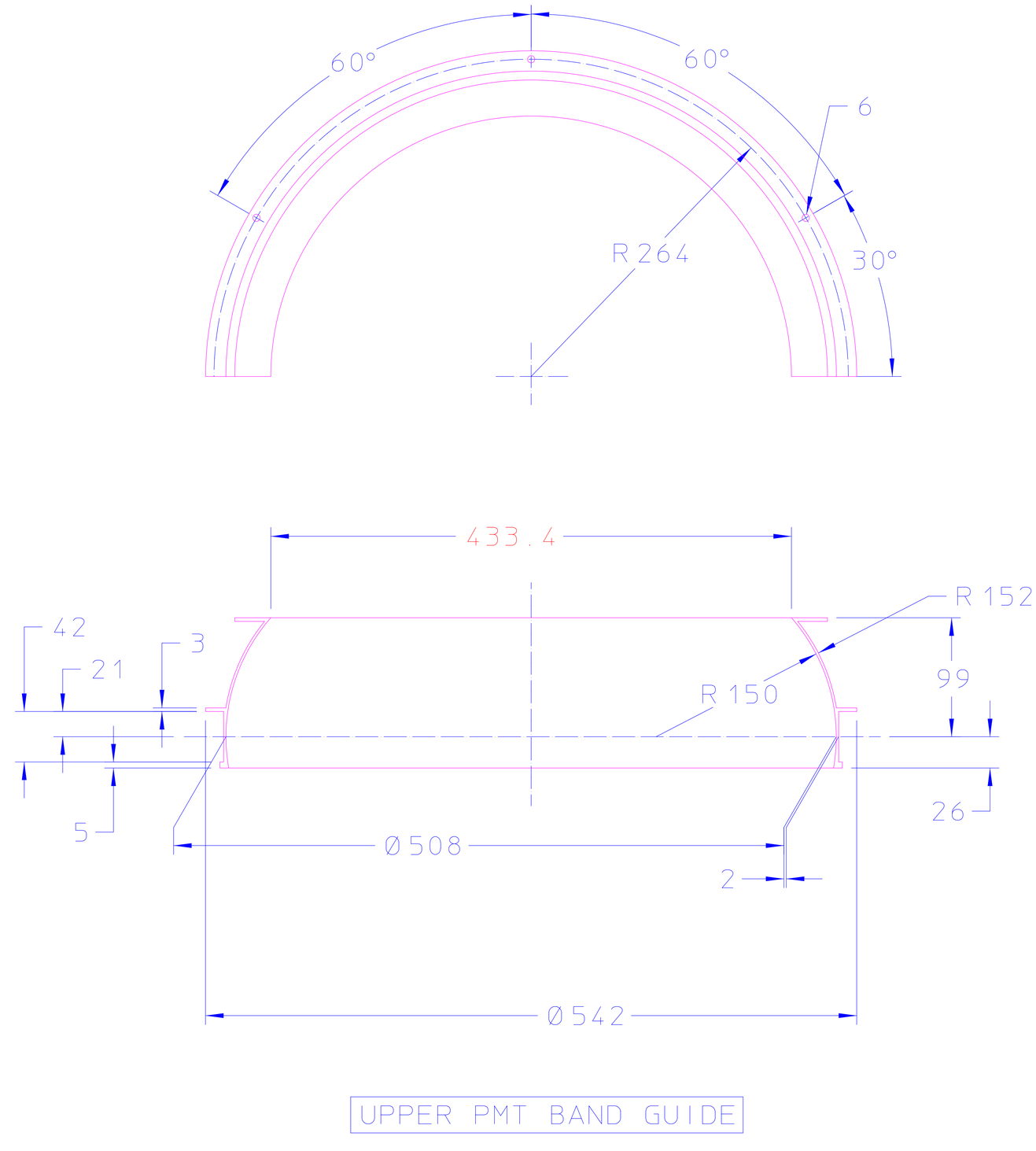
60°
60°
6
R 264
30°
433.4
R 152
42
3
21
R 150
99
5
26
Ø 508
2
Ø 542
UPPER PMT BAND GUIDE