NOTES (UNLESS OTHERWISE SPECIFIED):

1) DIMENSIONS IN INCHES.

2 FOR ACRYLIC PLATE DETAILS, REFER TO MITSUI DWG. NO. T117-426.

3 FOR ACRYLIC PLATE STRUCTUAL SUPPORT DETAILS, REFER TO MITSUI DRAWING NO. T117-429.

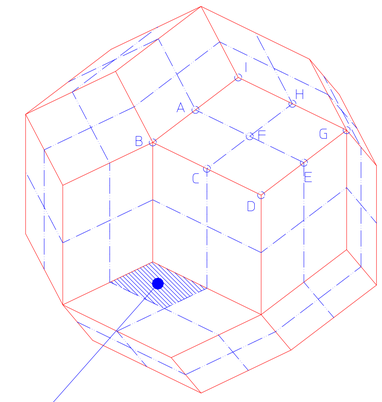

ACRYLIC PLATE SUB-FACETS.

THERE ARE FOUR NODE TYPES:
1) A,C,E,H
2) D,I
3) B,G
4) F

REF: MITSUI DRAWING T117-429

SCALE = 1/100

NORTH POLE (UP)

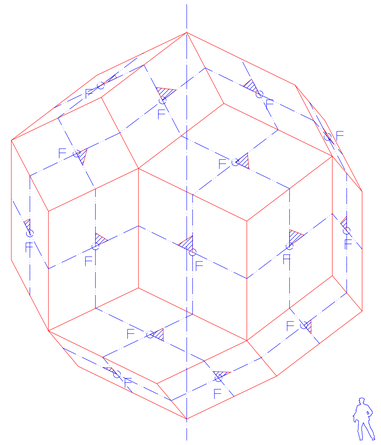

THE LED BRACKETS ARE INSTALLED AT THE TYPE 4 ("F") NODES, WHICH OCCURE 30 PLACES IN THE CENTER THE DIAMOND FACETS.

AT EACH "F" LOCATION, CHOOSE THE UPPER ACUTE ANGLE SUB-FACET VERTEX FOR INSTALLATION.

IF THE DIAMOND FACET IS HORIZONTAL, CHOOSE THE ACUTE ANGLE SUB-FACET VERTEX ON THE LEFT SIDE OF THE NODE, AS SEEN FROM INSIDE THE POLYHEDRON.

SCALE = 1/100

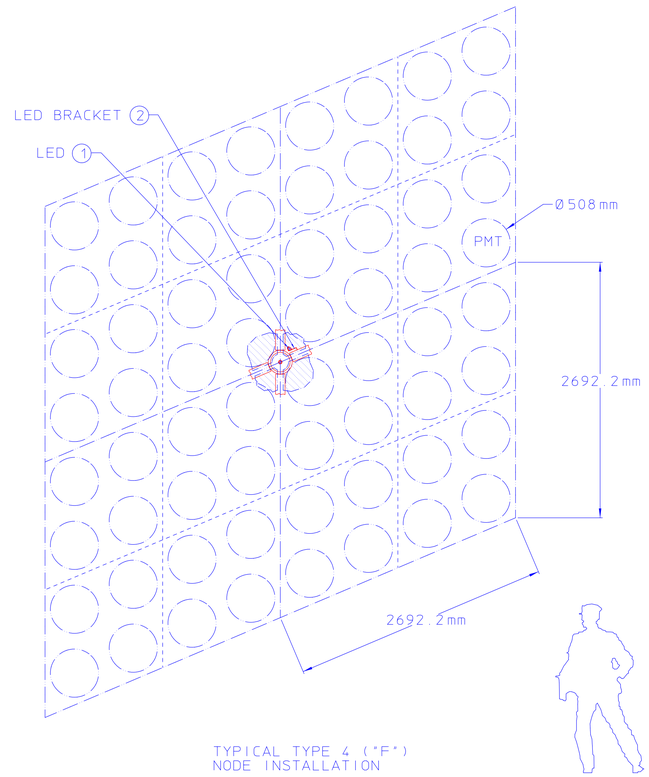

TYPICAL TYPE 4 ("F") NODE INSTALLATION

SCALE = 1/25

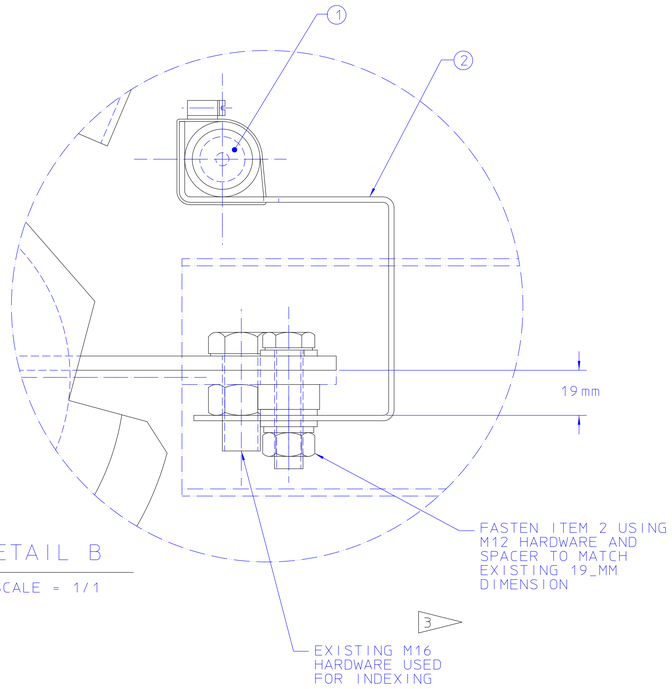

DETAIL B

SCALE = 1/1

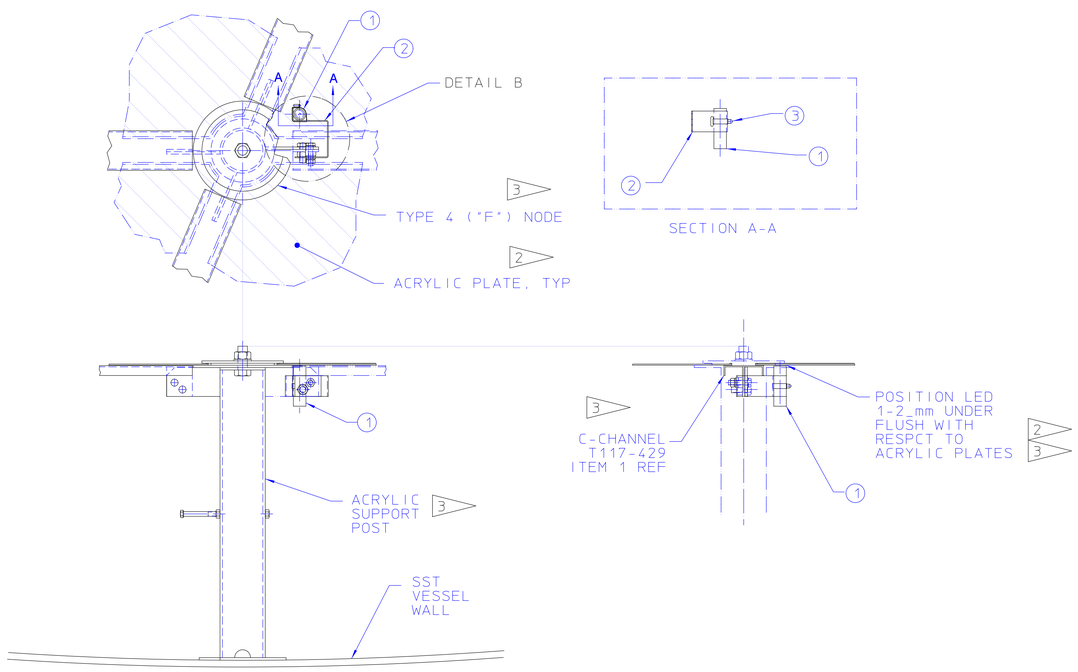

SECTION A-A

21F9216

ITEM	REQD	PART NO	DESCRIPTION
3	30		HOSE CLAMP, 1-1/2_IN HOSE, SST, SWAGEGELOK NO. MS-HCC-16 OR EQL
2	30	21F9044	BRACKET, LED
1	30	21F9202	LED CAPSULE ASSY

REV	DWG	CHK	ZONE	DATE	CHANGES

UNLESS OTHERWISE SPECIFIED
TOLERANCES: X ± .1 FRAC. ±1/64; XX ± .01 ANGLES ± 0.5°; XXX ± .005 FINISH 125√
THREADS ARE CLASS 2
CHAMFER ENDS OF ALL SCREW THREADS 30° CUT 1.5 PITCH THRD RELIEF WITH ROUND NOSE TOOL ON MACHINE CUT THREADS
BREAK EDGES .016 MAX. ON MACHINED WORK
REMOVE BURRS WELD SPLATTER & LOOSE SCALE
REF: ASME Y14.5M & ANSI B46.1

SHOP ORDERS
ACCT. NO. | SERIAL NO.
DATE ISSD | DATE REQD | NO. REQD
DELIVER TO
SURFACE TREATMENT: CLEAN
IDENT. METH: TAG
DWG BY: PAL DATE 06-23-00
CHK BY: CGF DATE 06-29-00

LAWRENCE BERKELEY NATIONAL LABORATORY
UNIVERSITY OF CALIFORNIA-BERKELEY
KamLAND
CALIBRATION & MONITORING
LED INSTALLATION

PATENT CLEAR	DWG. TYPE	SHOWN ON	SCALE	DO NOT SCALE PRINTS
	ASSY		1/6	
MICROFILMED	DESIGN ACCT NO	CATEGORY CODE	DWG. NO.	SIZE / REV.
	KLNK155		21F9216	0