NOTES (UNLESS OTHERWISE SPECIFIED):

1) DIMENSIONS IN INCHES.

2) ETCH CABLE ASSY, ITEM 7 BEFORE SOLDERING TO PC BOARD, ITEM 6. PER LBNL SPEC. M936.

3) POT ASSY PER LBNL SPEC. M937

4) FOR FURTHER INFORMATION ON PC BOARD, ITEM 6, CONTACT: COLIN OKADA, LBNL, (510) 486-7121 COkada@lbl.gov

21F9202

ITEM	REQD	PART NUMBER	DESCRIPTION
1	1	21F9152	HOUSING, LED CAPSULE
2	1	21F9161	LENS, LED CAPSULE
3	1		OPTICAL FILTER, NEUTRAL DENSITY NO. 3, EDMUND SCIENTIFIC NO. D43812 OR EQL
4	A/R		POTTING COMPOUND, CLEAR, ECCOBOND 27 A/B OR EQL. SEE NOTE 3.
5	A/R		OPAQUE (BLACK) POTTING COMPOUND, STYCAST 2651 OR EQL. SEE NOTE 3.
6	1		LED PC BOARD ASSY. SEE NOTE 4.
7	1		CABLE ASSY, BELDEN 88777 OR EQL.

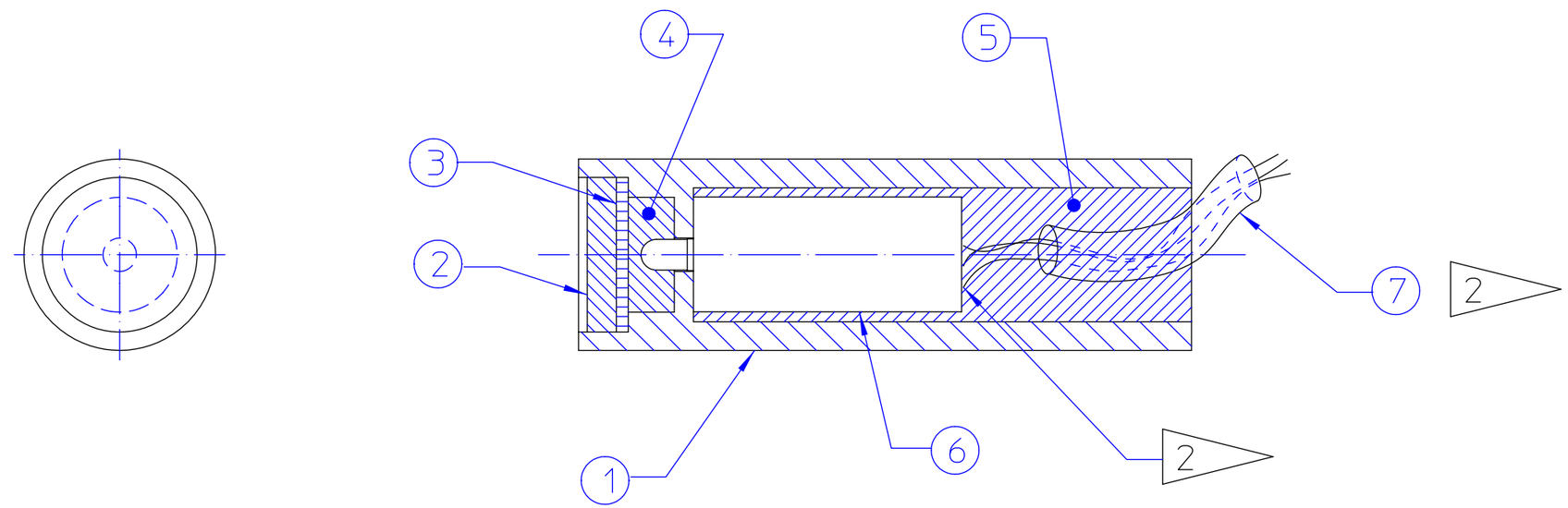

REV	DWN	CHK	DATE	DESCRIPTION

UNLESS OTHERWISE SPECIFIED

TOLERANCE .X ±.1 .XX ± .01 .XXX ±.005

ANGLES: ± 0.5° SURFACE FINISH 125 √

1. SAWED, FLAMECUT, SHEARED OR CUT STOCK FINISH.
2. THREADS CLASS 2.
3. CHAMFER ENDS OF ALL SCREW THRDS 30°.
4. 1 1/2 PITCH RELIEF WITH ROUND NOSE TOOL ON ALL MACHINE CUT THRDS.
5. BREAK EDGES 1/64 MAX. ON MACHINE WORK.
6. REMOVE BURRS, LOOSE SCALE AND WELD SPLATTER.
7. REF: ASME Y14.5M & ANSI B46.1.

SHOP ORDERS

ACCT NO	SER NO	
DATE ISSD	DATE REQD	NO REQD
DELIVER TO		
SURFACE TREATMENT	CLEAN	
IDENTIFIC METHOD	TAG	
DWG BY	PAL	DATE 06-23-00
CHK BY	CGF	DATE 06-29-00

LAWRENCE BERKELEY NATIONAL LABORATORY
UNIVERSITY OF CALIFORNIA-BERKELEY

KamLAND

CALIBRATION & MONITORING

LED CAPSULE ASSY

PAT CLEAR	DWG TYPE ASSY	SHOWN ON	SCALE: FULL DO NOT SCALE PRINTS
MICROFILMED	DESIGN ACCT NO KLNK155	CATEGORY CODE	DWG NO 21F9202 — REV 0