NOTES: (UNLESS OTHERWISE SPECIFIED):

1) DIMENSIONS IN INCHES.

2) SUGGESTED VENDOR FOR GATE VALVES, ITEMS 5, 7:
VACUUM RESEARCH CORP. (VRC)
PITTSBURG, PA
(800) 426-9340

3 ANGULAR ORIENTATION OF INDICATED COMPONENTS OPTIONAL.

4 FOR M5 PORT DETAILS AND VESSEL COORDINATE ANGLES, REFERENCE MITSUI DRAWING T117-526.

5 TORQUE CF FLANGE BOLTS TO 15 FT-LB (20 N-m). TORQUE BOLTS IN A PROGRESSIVE, DIAMETRICALLY OPPOSED SEQUENCE.

6 TORQUE M5A OUTSIDE DIAMETER BOLTS TO 75 FT-LB (100 N-m). TORQUE BOLTS IN A PROGRESSIVE, DIAMETRICALLY OPPOSED SEQUENCE.

7 APPLY ANTI-SEIZE COMPOUND, ITEM 15, TO M5A INSIDE DIAMETER NUTS PRIOR TO TIGHTENING. TORQUE TO 75 FT-LB (100 N-m). TORQUE BOLTS IN A PROGRESSIVE, DIAMETRICALLY OPPOSED SEQUENCE.

8 APPLY ANTI-SEIZE COMPOUND, ITEM 15, TO 16_IN VALVE BOLTS PRIOR TO INSTALLATION. TORQUE TO 50 FT-LB (70 N-m). TORQUE BOLTS IN A PROGRESSIVE, DIAMETRICALLY OPPOSED SEQUENCE.

9 APPLY ANTI-SEIZE COMPOUND, ITEM 15, TO 6_IN VALVE BOLTS PRIOR TO INSTALLATION. TORQUE TO 45 FT-LB (60 N-m). TORQUE BOLTS IN A PROGRESSIVE, DIAMETRICALLY OPPOSED SEQUENCE.

10) CLEAN COMPONENTS PRIOR TO ASSY PER LBL SPEC M775B, AND BAG.

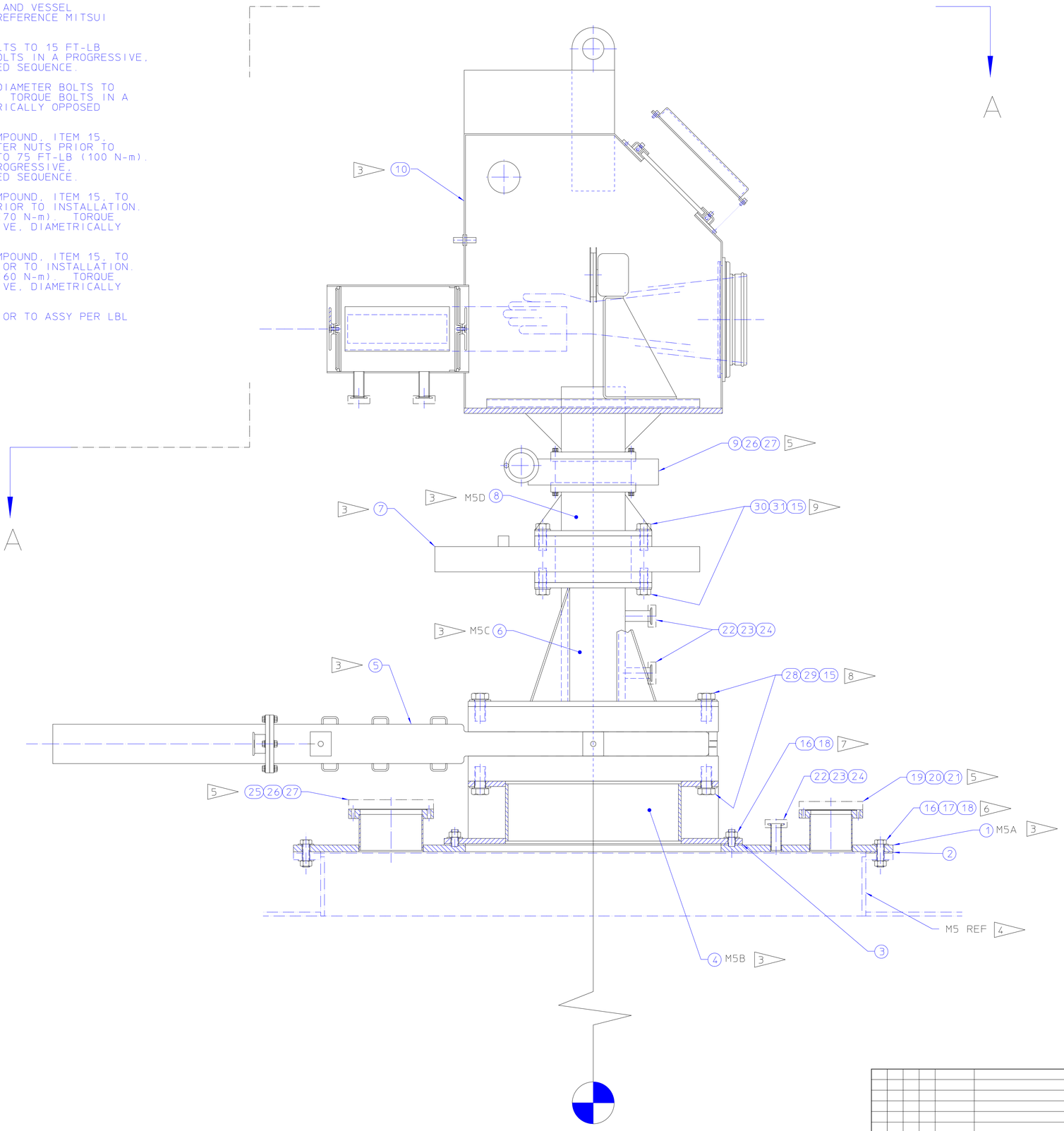

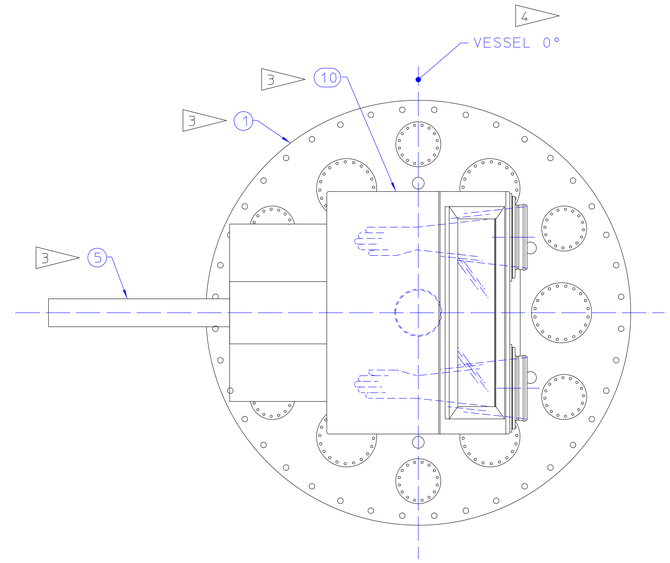

VIEW A-A
SCALE = 1/8

21F9176

ITEM	REQD	PART NO.	DESCRIPTION
31	16		BOLT, HEX HD, 3/4-10 X 2_IN LG, C-STL, ISO CLASS 8.8
30	16		WASHER, FLAT, ROUND, 3/4_IN, C-STL, ISO CLASS 8.8
29	32		BOLT, HEX-HD, 1-8 X 2_IN LG, C-STL, ISO CLASS 8.8
28	32		WASHER, FLAT, ROUND, 1_IN, C-STL, ISO CLASS 8.8
27	8		BOLT-SET, HEX HD, FOR 8_IN CONFLAT FLANGE, CL HOLE, MDC NO. 190008 OR EQL.
26	8		GASKET, CONFLAT, VITON, FOR 8_IN FLANGE, MDC NO. 191018 OR EQL
25	6		FLANGE, BLANK, 8_IN CONFLAT, CL HOLE, MDC NO. 110030 OR EQL.
24	8		CLAMP, HINGED, FOR ISO KF NW25 FLANGE, MDC NO. 701001 OR EQL
23	8		CENTERING RING ASSY, ISO KF NW25, SST, VITON O-RING, MDC NO. 710001 OR EQL
22	8		FLANGE, BLANK, ISO KF NW25, MDC NO. 712001 OR EQL
21	6		BOLT-SET, HEX HD, FOR 6_IN CONFLAT FLANGE, CL HOLE, NON-ROT, MDC NO. 190007 OR EQL
20	6		GASKET, CONFLAT, VITON, FOR 6_IN FLANGE, MDC NO. 191014 OR EQL
19	6		FLANGE, BLANK, 6_IN CONFLAT, CL HOLE, MDC NO. 110025 OR EQL
18	100		WASHER, FLAT, ROUND, M16, C-STL, ISO CLASS 8.8
17	40		BOLT, HEX HD, M16X2-4g6g X 55_mm LG, C-STL, ISO CLASS 8.8
16	60		NUT, M16X2-6H, C-STL, ISO CLASS 8.8
15	A/R		ANTISEIZE COMPOUND, FEL-PRO C-100 OR EQL.
14			
13			
12			
11			
10	1	21F9146	ENVELOPE, GLOVE-BOX, Z-AXIS
9	1		STAGE, ROTARY FEEDTHROUGH, 8_IN CF FLANGE, 6.25_IN BORE, MANUAL ACTUATION, MDC MODEL NO. RMTG-800, PART NO. 665413.
8	1	21F9114	SPOOL, M5D
7	1		GATE VALVE, AL, 6_IN, ANSI FLANGE, VITON O-RINGS, MANUAL ACTUATION, VRC NO. LPWA-6-ASA-N1-20-V-M OR EQL. SEE NOTE 2
6	1	21F9106	SPOOL, M5C
5	1		GATE VALVE, AL, 16_IN, ANSI FLANGE, VITON O-RINGS, TENV ELECTRIC MOTOR ACTUATION, VRC NO. END_16_N1-20-V-MO-LSX. SEE NOTE 2
4	1	21F9086	SPOOL, M5B
3	1	21F9193	GASKET, M5B
2	1	21F9184	GASKET, M5A
1	1	21F9066	M5A FLANGE WELDING

REV	DWG	CHK	ZONE	DATE	CHANGES

UNLESS OTHERWISE SPECIFIED
TOLERANCES: X ± .1 FRAC. ± 1/64; XX ± .01 ANGLES ± 0.5°; XXX ± .005 FINISH 125√
THREADS ARE CLASS 2
CHAMFER ENDS OF ALL SCREW THREADS 30° OUT 1.5 PITCH THRU RELIEF WITH ROUND NOSE TOOL ON MACHINE CUT THREADS.
BREAK EDGES .016 MAX. ON MACHINED WORK.
REMOVE BURRS WELD SPLATTER & LOOSE SCALE
REF: ASME Y14.5M & ANSI B46.1.

SHOP ORDERS
ACCT. NO. | SERIAL NO.
DATE ISSD | DATE REQD. | NO. REQD.
DELIVER TO
SURFACE TREATMENT: CLEAN
IDENT METH. TAG
DWG BY: PAL | DATE 06-22-00
CHK BY: CGF | DATE 06-27-00

LAWRENCE BERKELEY NATIONAL LABORATORY
UNIVERSITY OF CALIFORNIA-BERKELEY
KamLAND
CALIBRATION & MONITORING
Z-AXIS SYSTEM ASSY

PATENT CLEAR	DWG. TYPE	SHOWN ON	SCALE	DO NOT SCALE PRINTS
	ASSY		1/4	
MICROFILMED	DESIGN ACCT. NO.	CATEGORY CODE	DWG. NO.	SIZE / REV.
	KLNK155		21F9176	0