UNLESS OTHERWISE NOTED			SHOP ORDERS			PATENT CLR	DWG TYPE DETAIL	SHOWN ON	DWG NO 21F9161	REV 0
.X ± .1	.XX ± .01	.XXX ± .005	ACCT NO	SER NO		MICROFILMED	DES ACCT NO 6109-01	CATEGORY	SCALE 1/1 (Do not scale prints)	
ANGLES ± 0.5°	FINISH 125 ✓		DATE ISSD	DATE REQD	NO REQD					
THREADS ARE CLASS 2. CHAMFER ENDS OF ALL SCREW THREADS 30°. CUT 1.5 PITCH THRD RELIEF WITH ROUND NOSE TOOL ON MACHINE CUT THRDS. BREAK EDGES .016 MAX ON MACHINED WORK. REMOVE BURRS WELD SPLATTER & LOOSE SCALE. REF: ASME Y14.5M & ANSI B46.1.			DEL TO			LAWRENCE BERKELEY NATIONAL LABORATORY				
			SURFACE TREATMENT CLEAN			KamLAND				
			IDENTIF. METHOD BAG & TAG			CALIBRATION & MONITORING				
			DWN BY PAL		DATE 06-21-00	LENS, LED CAPSULE				
			CHK BY CGF		DATE 06-29-00	MATERIAL ACRYLIC, CLEAR				

REV	DWN	CHK	DATE	CHANGES
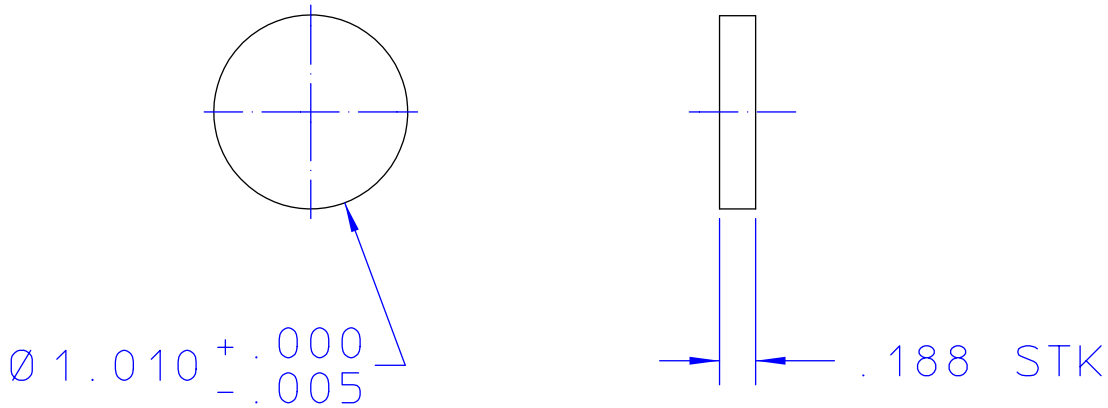
NOTES (UNLESS OTHERWISE SPECIFIED):
1) DIMENSIONS IN INCHES.