NOTES (UNLESS OTHERWISE SPECIFIED):

1) DIMENSIONS IN INCHES.

2) MATL: ROD, ACRYLIC, BLACK

21F9152	ITEM	REQD	PART NUMBER	DESCRIPTION

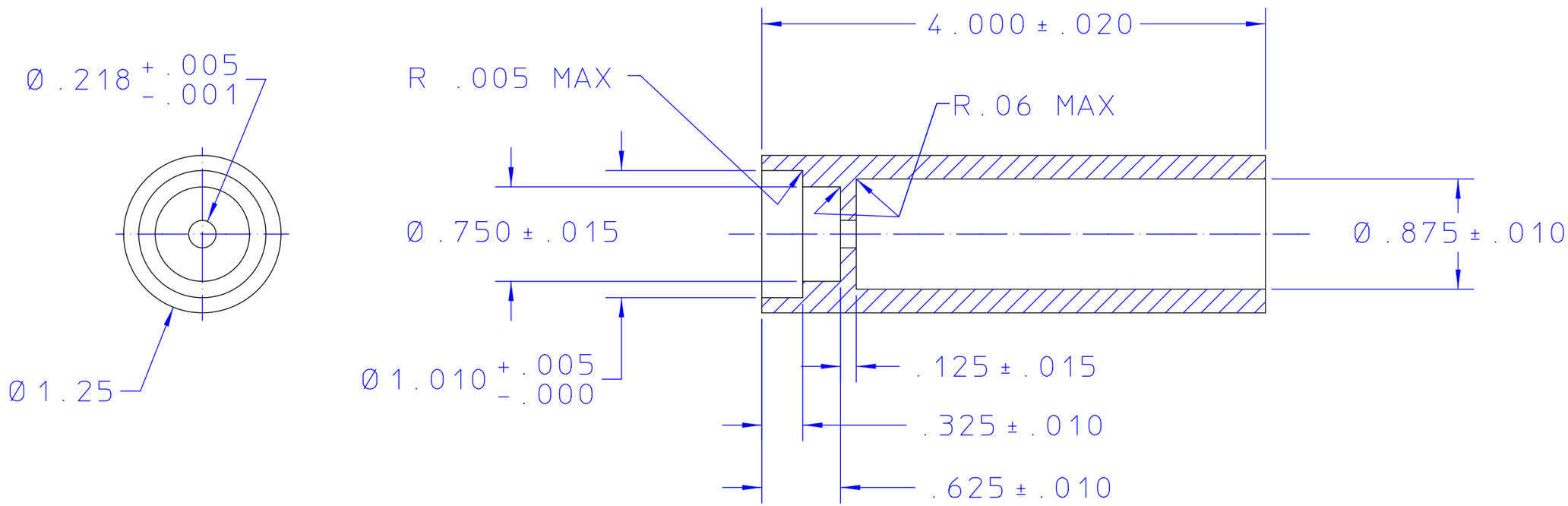

REV	DWN	CHK	DATE	DESCRIPTION

UNLESS OTHERWISE SPECIFIED

TOLERANCE .X ±.1 .XX ± .01 .XXX ±.005

ANGLES: ± 0.5° SURFACE FINISH 125 ✓

1. SAWED, FLAMECUT, SHEARED OR CUT STOCK FINISH.
2. THREADS CLASS 2.
3. CHAMFER ENDS OF ALL SCREW THRDS 30°.
4. 1 1/2 PITCH RELIEF WITH ROUND NOSE TOOL ON ALL MACHINE CUT THRDS.
5. BREAK EDGES 1/64 MAX. ON MACHINE WORK.
6. REMOVE BURRS, LOOSE SCALE AND WELD SPLATTER.
7. REF: ASME Y14.5M & ANSI B46.1.

SHOP ORDERS

ACCT NO	SER NO	
DATE ISSD	DATE REQD	NO REQD
DELIVER TO		
SURFACE TREATMENT	CLEAN	
IDENTIFIC METHOD	TAG	
DWG BY	PAL	DATE 06-21-00
CHK BY	CGF	DATE 06-29-00

LAWRENCE BERKELEY NATIONAL LABORATORY

UNIVERSITY OF CALIFORNIA-BERKELEY

KamLAND

CALIBRATION & MONITORING

HOUSING, LED CAPSULE

PAT CLEAR	DWG TYPE DETAIL	SHOWN ON	SCALE: FULL (DO NOT SCALE PRINTS)	
MICROFILMED	DESIGN ACCT NO KLNK155	CATEGORY CODE	DWG NO 21F9152	REV 0