NOTES (UNLESS OTHERWISE SPECIFIED):

1) DIMENSIONS IN INCHES.

2) FABRICATE PER LBNL SPECIFICATION M938, "KAMLAND Z-AXIS GLOVE-BOX FABRICATION"

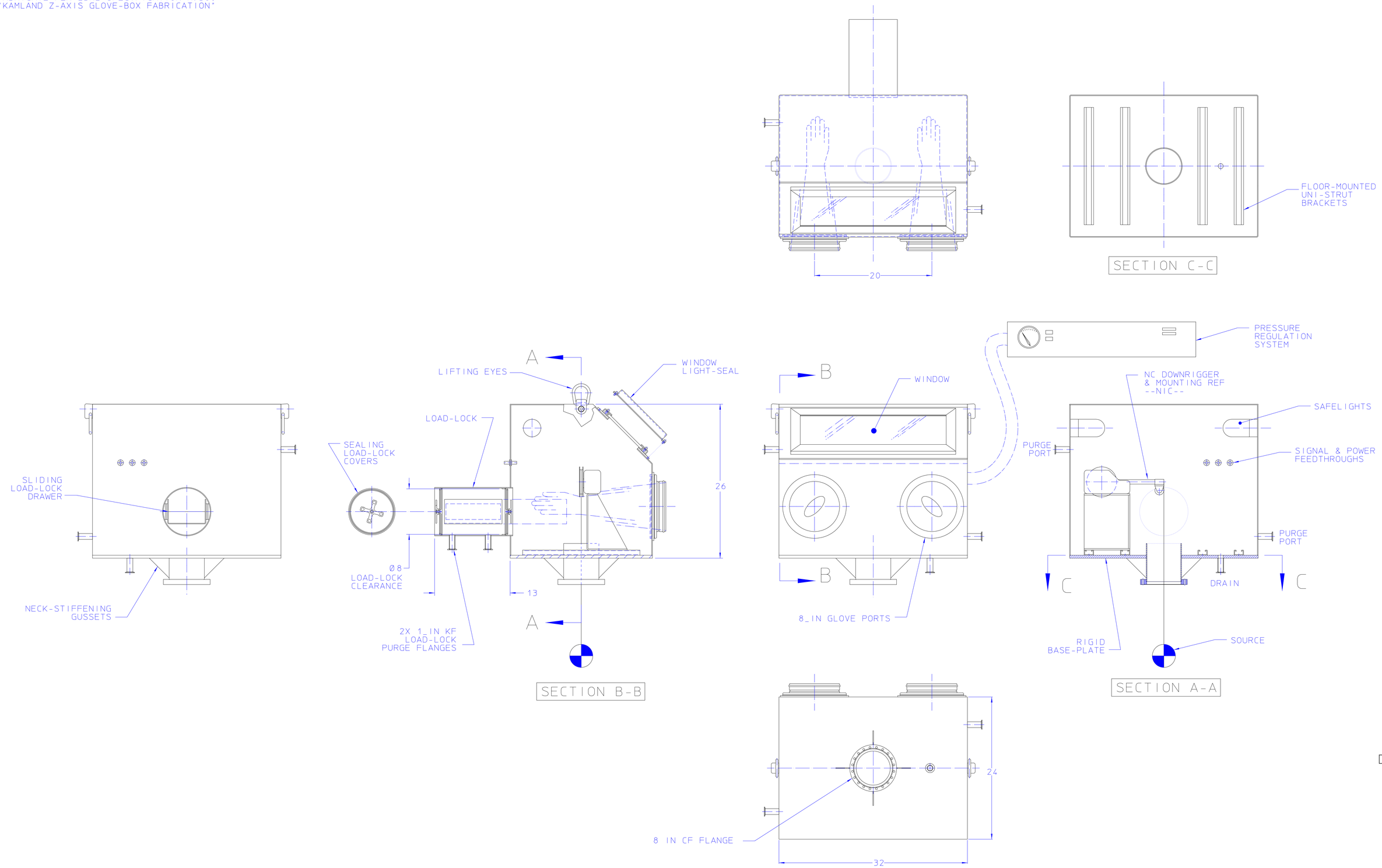

21F9146

REV	DWG	CHK	ZONE	DATE	CHANGES

UNLESS OTHERWISE SPECIFIED
TOLERANCES: X ± .1 FRAC. ±1/64; XX ± .01 ANGLES ± 0.5°; XXX ± .005 FINISH 125√
THREADS ARE CLASS 2
CHAMFER ENDS OF ALL SCREW THREADS 30° GIF 1.5 PITCH THRD RELIEF WITH ROUND NOSE TOOL ON MACHINE CUT THREADS.
BREAK EDGES .016 MAX. ON MACHINED WORK.
REMOVE BURRS WELD SPLATTER & LOOSE SCALE
REF: ASME Y14.5M & ANSI B46.1

SHOP ORDERS
ACCT NO. / SERIAL NO.
DATE ISSD / DATE REQD / NO. REQD.
DELIVER TO
SURFACE TREATMENT: CLEAN
IDENT METH: TAG
DWG BY: PAL — DATE 06-19-00
CHK BY: CGF — DATE 06-29-00

ITEM	REQD	PART NO	DESCRIPTION

LAWRENCE BERKELEY NATIONAL LABORATORY
UNIVERSITY OF CALIFORNIA-BERKELEY

KamLAND
CALIBRATION & MONITORING
ENVELOPE, GLOVE-BOX, Z-AXIS

PATENT CLEAR	DWG. TYPE	SHOWN ON	SCALE	DO NOT SCALE PRINTS
	ASSY		1/6	

MICROFILMED	DESIGN ACCT. NO.	CATEGORY CODE	DWG. NO.	SIZE	REV.
	KLNK155		21F9146		0