ITEM	REQD	PART NUMBER	DESCRIPTION
1	A/R		PLATE, 304 SST, 1/2" THK
2	A/R		TUBE, 304 SST, 6.00 OD X .25 WALL
3	1		FLANGE, VACUUM, CF, 8", MDC NO. 11031 OR EQL
4	A/R		PLATE, 304 SST, 1/4" THK

NOTES (UNLESS OTHERWISE SPECIFIED):

1) DIMENSIONS IN INCHES. INTERPRET DIMENSIONS AND TOLERANCES PER ANSI/ASME Y14.5M-1994.

2 FLUXLESS GMAW (MIG) WITH 304 SST WIRE OR UNTHORIATED GTAW (TIG) WELD ONLY.

3 ALL SEAL WELDS TO BE HELIUM LEAK-TIGHT TO 10E-7 STD ATM cc/SEC PER ASTM E498.

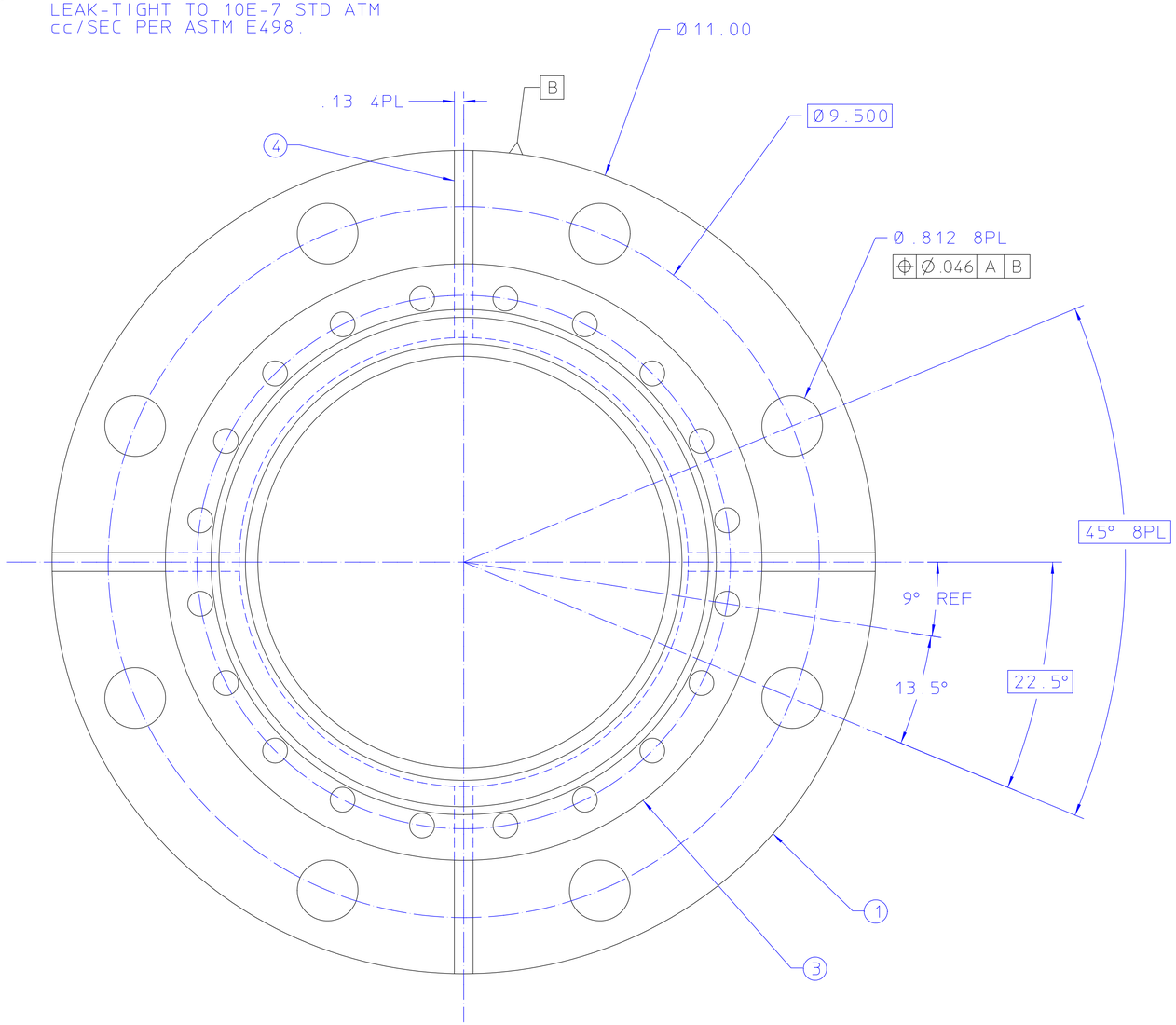

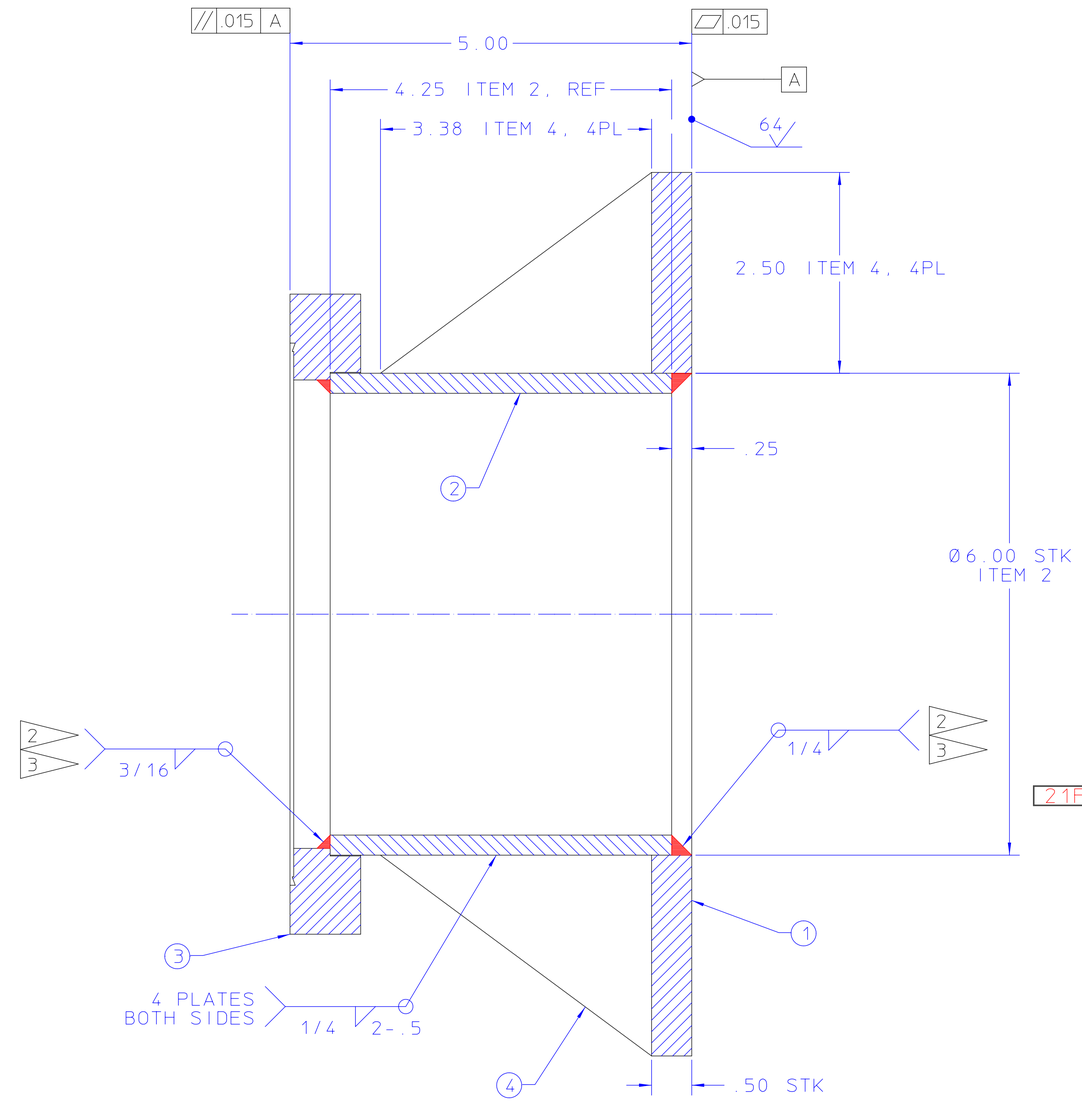

REV	DWG	CHK	ZONE	DATE	CHANGES

UNLESS OTHERWISE SPECIFIED

TOLERANCES			
	.X ± .1	FRAC. ± 1/64	
	.XX ± .01	ANGLES ± 0.5°	
	.XXX ± .005	FINISH 125√	

THREADS ARE CLASS 2
CHAMFER ENDS OF ALL SCREW THREADS 30°.
CUT 1.5 PITCH THRD RELIEF WITH ROUND NOSE TOOL ON MACHINE CUT THREADS.
BREAK EDGES .016 MAX. ON MACHINED WORK
REMOVE BURRS WELD SPLATTER & LOOSE SCALE
REF.: ASME Y14.5M & ANSI B46.1.

SHOP ORDERS

ACCT. NO.		SERIAL NO.	
DATE ISSD.	DATE REQD.	NO. REQD.	
DELIVER TO			
SURFACE TREATMENT	CLEAN		
IDENT. METH.	TAG		
DWG. BY	PAL	DATE	06-08-00
CHK. BY	CGF	DATE	06-15-00

LAWRENCE BERKELEY NATIONAL LABORATORY
UNIVERSITY OF CALIFORNIA-BERKELEY

KamLAND
CALIBRIATION & MONITORING
SPOOL, M5D

PATENT CLEAR	DWG. TYPE	SHOWN ON	SCALE	DO NOT SCALE PRINTS
	DETAIL		FULL	
MICROFILMED	DESIGN ACCT. NO.	CATEGORY CODE	DWG. NO.	SIZE / REV
	KLNK155		21F9114	0