NOTES (UNLESS OTHERWISE SPECIFIED):

1) DIMENSIONS IN INCHES. INTERPRET DIMENSIONS AND TOLERANCES PER ANSI/ASME Y14.5M-1994.

2 FLUXLESS GMAW (MIG) WITH 304 SST WIRE OR UNTHORIATED GTAW (TIG) WELD ONLY.

3 ALL SEAL WELDS TO BE HELIUM LEAK-TIGHT TO 10E-7 STD ATM cc/SEC PER ASTM E498.

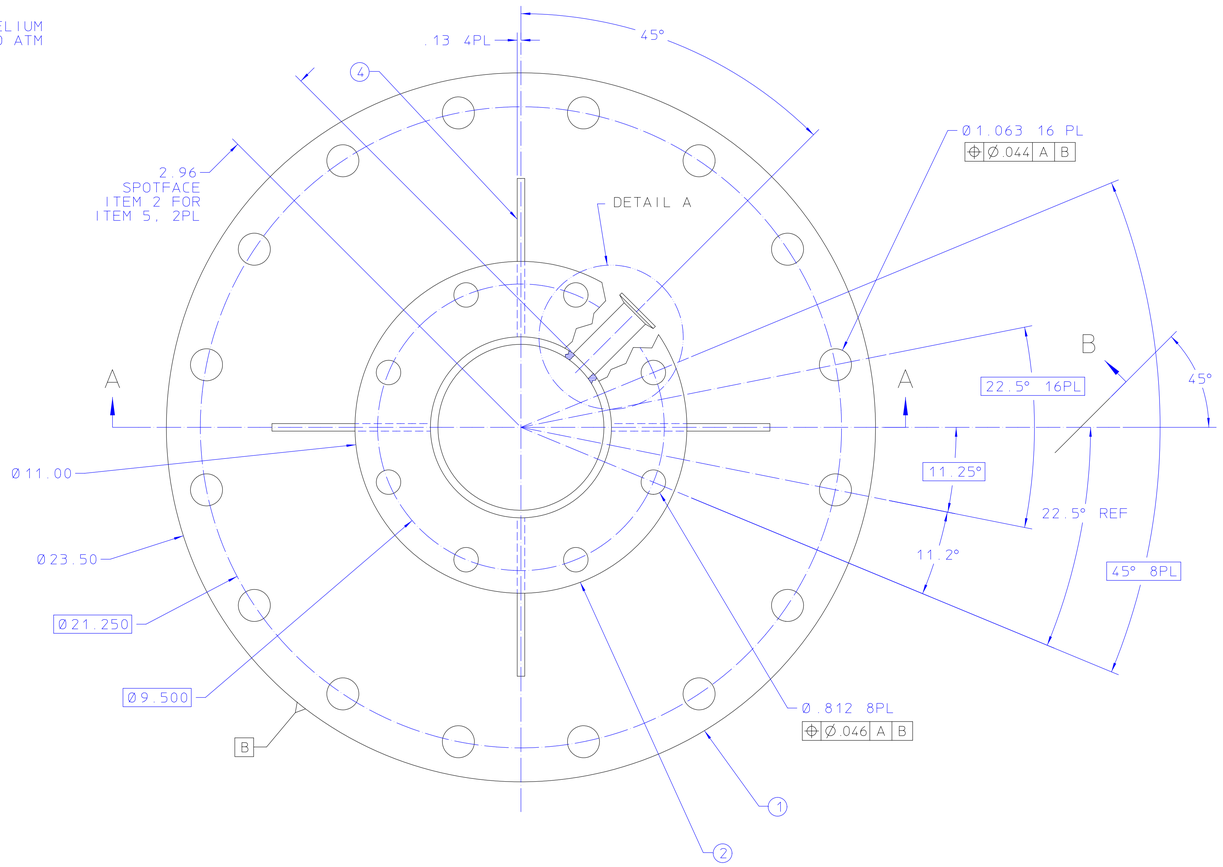

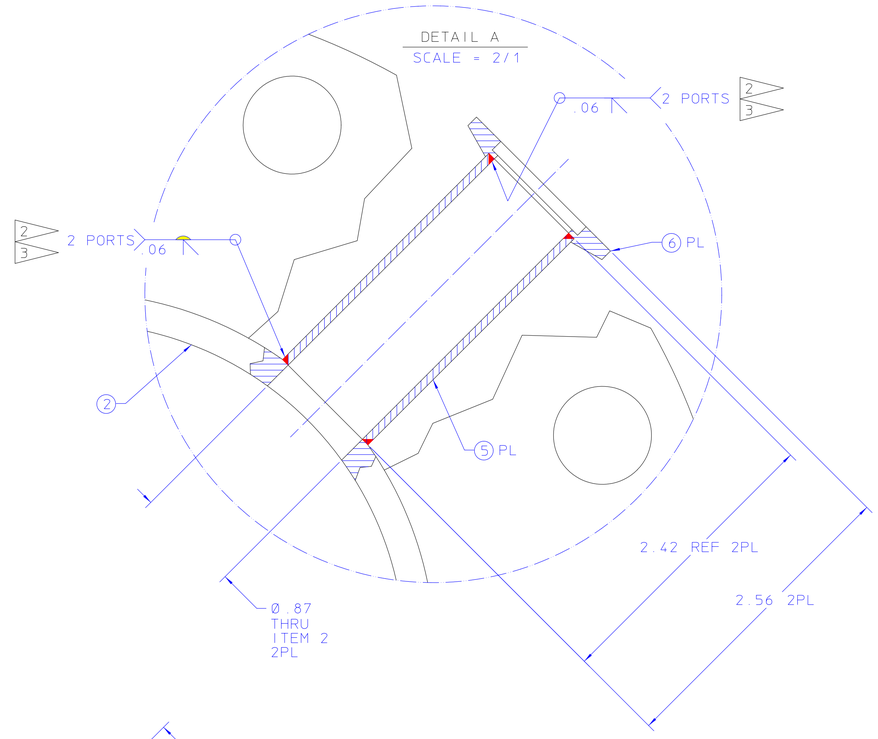

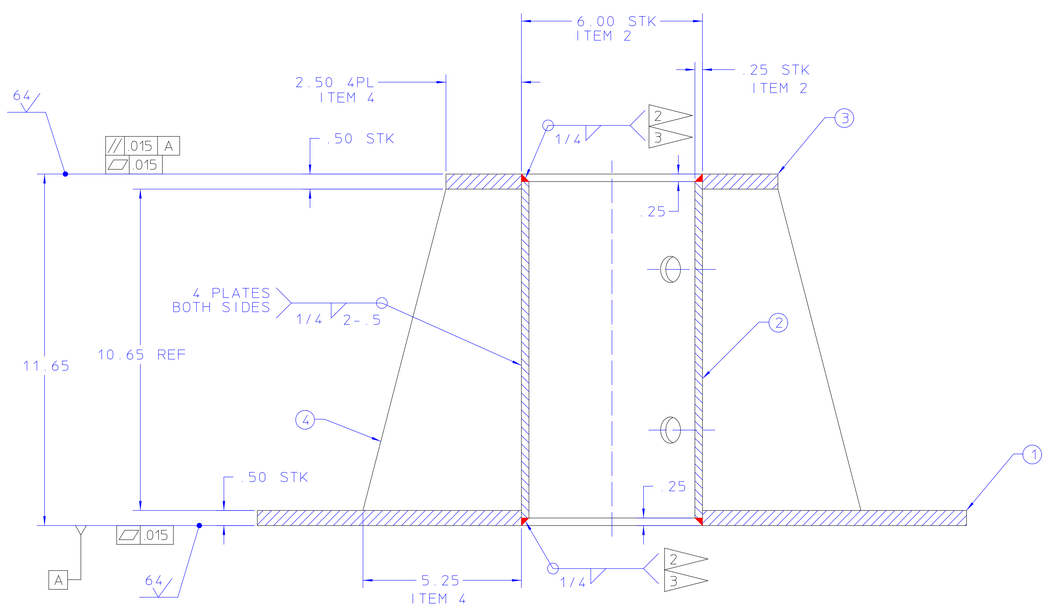

SECTION A-A

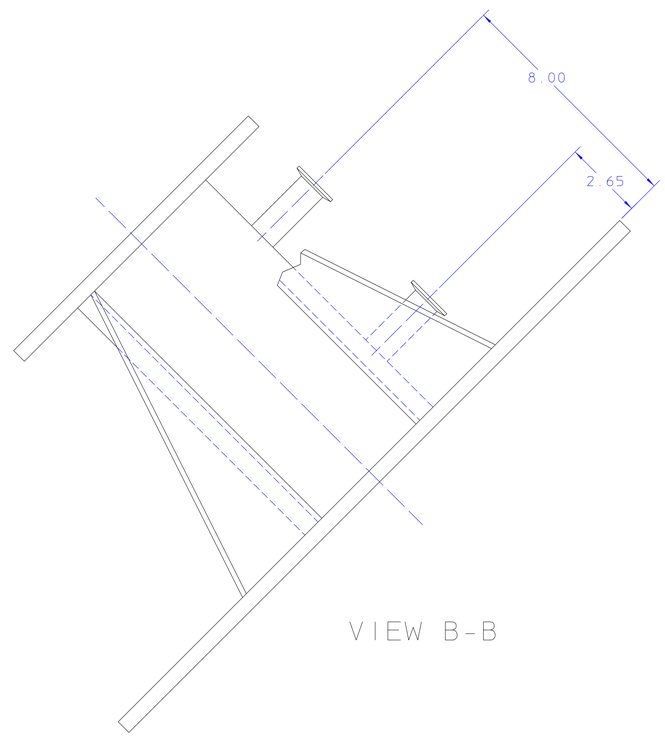

VIEW B-B

21F9106

ITEM	REQD	PART NO.	DESCRIPTION
6	2		FLANGE, VACUUM, ISO KF NW25, MDC P/N 713011 OR EQL
5	A/R		TUBING, VACUUM, 304 SST, 1.00 OD X .065 WALL, MDC P/N 48004 OR EQL
4	A/R		PLATE, 304 SST, 1/4 THK
3	A/R		PLATE, 304 SST, 1/2 THK
2	A/R		TUBE, 304 SST, 6.00 OD X .25 WALL
1	A/R		PLATE, 304 SST, 1/2 THK

REV	DWG	CHK	ZONE	DATE	CHANGES

UNLESS OTHERWISE SPECIFIED
TOLERANCES: .X ± .1 FRAC. ±1/64; .XX ± .01 ANGLES ± 0.5°; .XXX ± .005 FINISH 125√
THREADS ARE CLASS 2
CHAMFER ENDS OF ALL SCREW THREADS 30°
CUT 1.5 PITCH THRD RELIEF WITH ROUND NOSE TOOL ON MACHINE CUT THREADS.
BREAK EDGES .016 MAX ON MACHINED WORK.
REMOVE BURRS WELD SPLATTER & LOOSE SCALE
REF: ASME Y14.5M & ANSI B46.1.

SHOP ORDERS
ACCT NO.: SERIAL NO.:
DATE ISSD: DATE REQD: NO REQD:
DELIVER TO:
SURFACE TREATMENT: CLEAN
IDENT METH.: TAG
DWG BY: PAL DATE: 06-06-00
CHK BY: CGF DATE: 06-15-00

LAWRENCE BERKELEY NATIONAL LABORATORY
UNIVERSITY OF CALIFORNIA-BERKELEY
KamLAND
CALIBRATION & MONITORING
SPOOL, M5C

PATENT CLEAR | DWG. TYPE: DETAIL | SHOWN ON | SCALE: HALF | DO NOT SCALE PRINTS
MICROFILMED | DESIGN ACCT. NO.: KLNK155 | CATEGORY CODE | DWG. NO.: 21F9106 | SIZE | REV.: 0