NOTES (UNLESS OTHERWISE SPECIFIED):

1) DIMENSIONS IN INCHES. INTERPRET DIMENSIONS AND TOLERANCES PER ANSI/ASME Y14.5M-1994.

2 FLUXLESS GMAW (MIG) WITH 304 SST WIRE OR UNTHORIATED GTAW (TIG) WELD ONLY.

3 ALL SEAL WELDS TO BE HELIUM LEAK-TIGHT TO 10E-7 STD ATM cc/SEC PER ASTM E498.

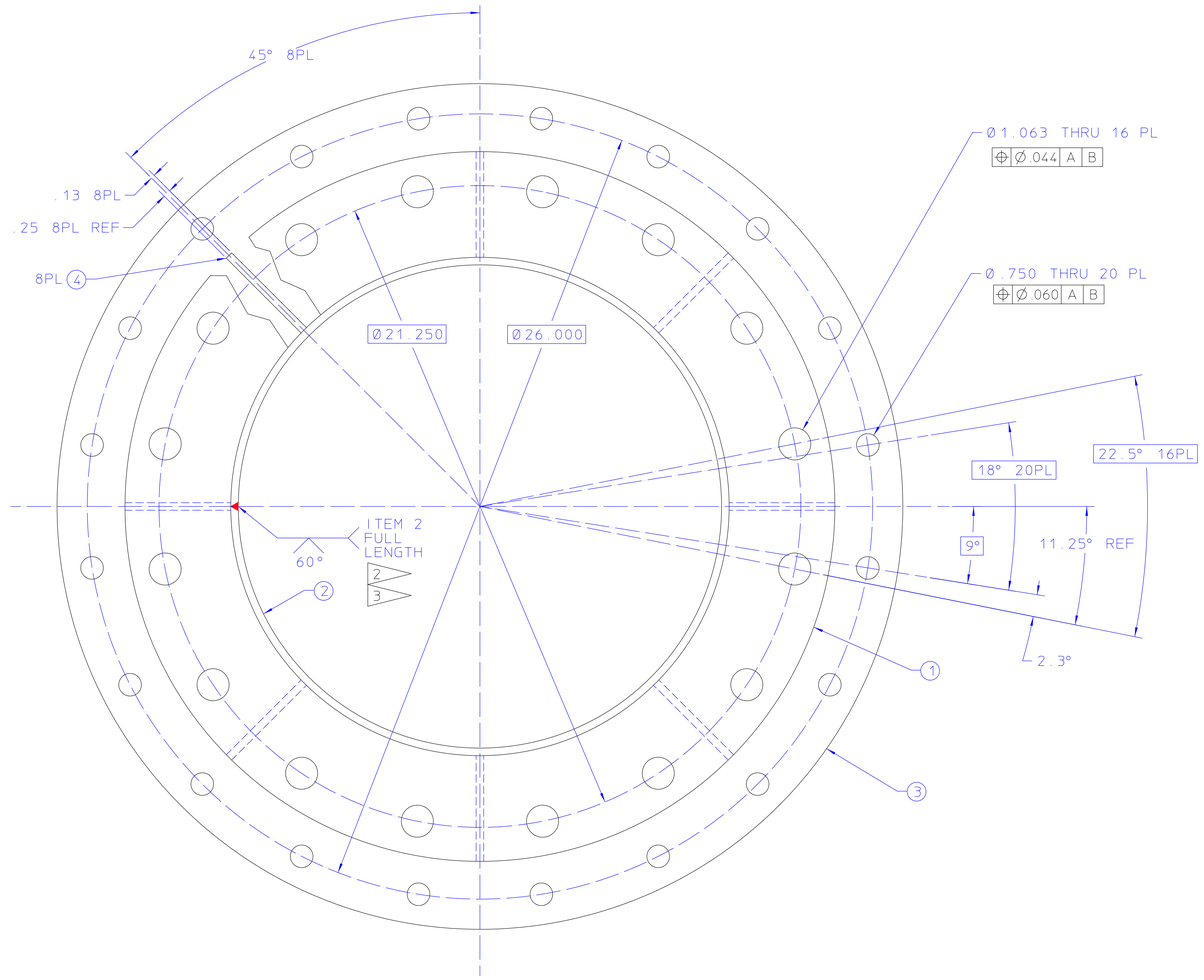

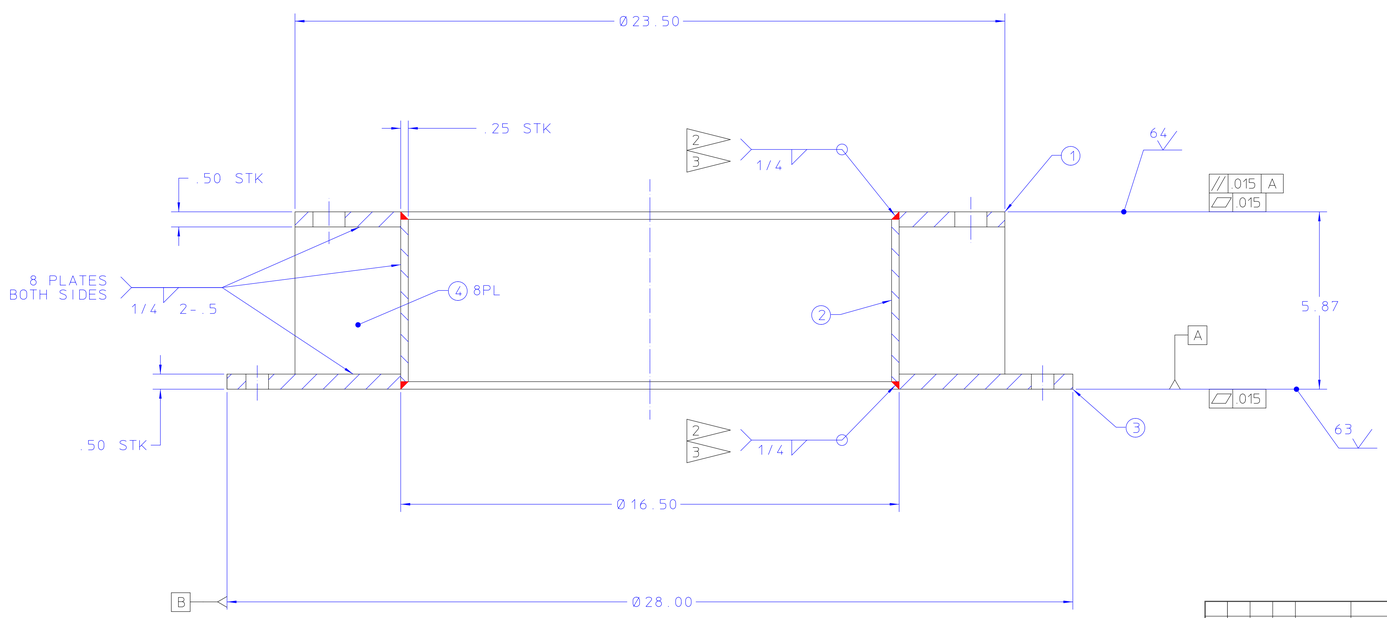

ITEM	REQD	PART NO	DESCRIPTION
4	A/R		PLATE, 304 SST, 1/4 THK
3	A/R		PLATE, 304 SST, 1/2 THK
2	A/R		PLATE, 304 SST, 1/4 THK
1	A/R		PLATE, 304 SST, 1/2 THK

REV	DWG	CHK	ZONE	DATE	CHANGES
1	PL	PL		06-06-00	UPDATED FOR RELEASE

UNLESS OTHERWISE SPECIFIED
TOLERANCES: X ± .1 FRAC. ±1/64; XX ± .01 ANGLES ± 0.5°; XXX ± .005 FINISH 125
THREADS ARE CLASS 2
CHAMFER ENDS OF ALL SCREW THREADS 30° CUT 1.5 PITCH THRD RELIEF WITH ROUND NOSE TOOL ON MACHINE CUT THREADS
BREAK EDGES .016 MAX ON MACHINED WORK
REMOVE BURRS WELD SPLATTER & LOOSE SCALE
REF: ASME Y14.5M & ANSI B46.1

SHOP ORDERS
ACCT NO. | SERIAL NO.
DATE ISSD | DATE REQD | NO REQD
DELIVER TO
SURFACE TREATMENT: CLEAN
IDENT METH: TAG
DWG BY: PAL DATE: 05-24-00
CHK BY: CGF DATE: 06-15-00

LAWRENCE BERKELEY NATIONAL LABORATORY
UNIVERSITY OF CALIFORNIA-BERKELEY
KamLAND
CALIBRATION & MONITORING
SPOOL, M5B

PATENT CLEAR	DWG. TYPE	SHOWN ON	SCALE	DO NOT SCALE PRINTS
	DETAIL		HALF	
MICROFILMED	DESIGN ACCT NO	CATEGORY CODE	DWG. NO	SIZE / REV
	KLNK155		21F9086	1

21F9086