ITEM	REQD	PART NUMBER	DESCRIPTION

NOTES (UNLESS OTHERWISE SPECIFIED):

1) DIMENSIONS IN INCHES. INTERPRET DIMENSIONS AND TOLERANCES PER ANSI/ASME Y14.5M-1994

2) MATL: 304 SST

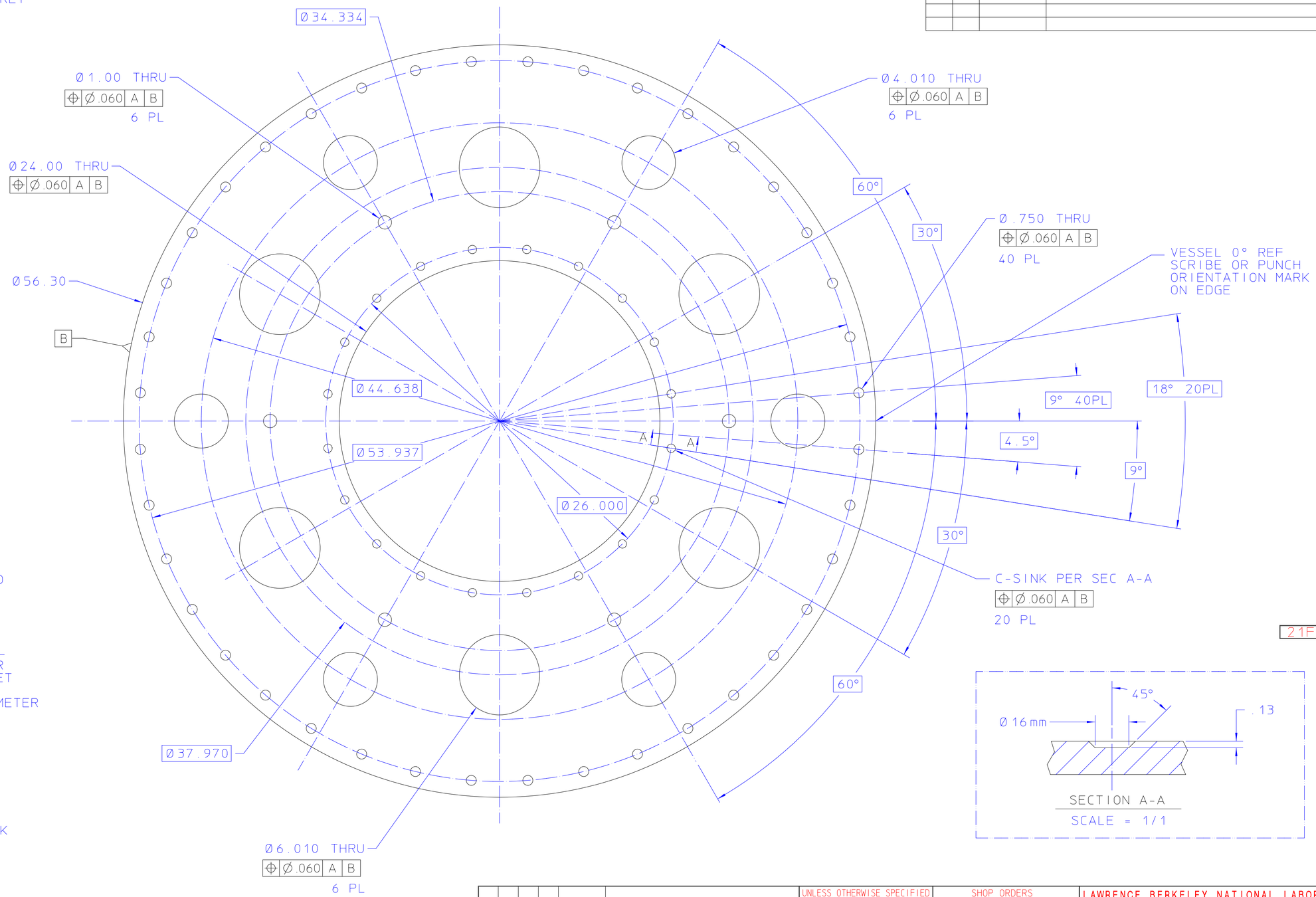

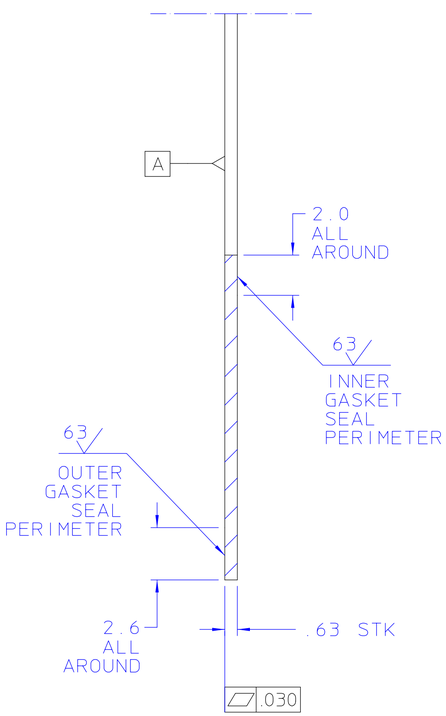

21F9054

REV	DWG	CHK	ZONE	DATE	CHANGES
3	PL	PL		06-06-00	Ø4.010 HOLES WERE Ø4.04, Ø6.010 HOLES WERE Ø6.04, 63 MICRO-INCH CALLOUTS WERE 125
2	PL	PL		05-23-00	UPDATED FOR RELEASE
1	PL	PL		05-22-00	SUB-FLANGE PATTERN REVISED

UNLESS OTHERWISE SPECIFIED

TOLERANCES: .X ± .1 FRAC. ± 1/64; .XX ± .01 ANGLES ± 0.5°; .XXX ± .005 FINISH 125√

THREADS ARE CLASS 2. CHAMFER ENDS OF ALL SCREW THREADS 30°. CUT 1.5 PITCH THRD RELIEF WITH ROUND NOSE TOOL ON MACHINE CUT THREADS. BREAK EDGES .016 MAX. ON MACHINED WORK REMOVE BURRS WELD SPLATTER & LOOSE SCALE REF: ASME Y14.5M & ANSI B46.1.

SHOP ORDERS

ACCT. NO. KLNK155 SERIAL NO. N/A
DATE ISSD. DATE REQD. NO. REQD.
DELIVER TO
SURFACE TREATMENT CLEAN
IDENT. METH. TAG
DWG. BY PAL DATE 05-15-00
CHK. BY CGF DATE 05-22-00

LAWRENCE BERKELEY NATIONAL LABORATORY
UNIVERSITY OF CALIFORNIA-BERKELEY

KamLAND
CALIBRATION & MONITORING
M5A FLANGE MACHINING

PATENT CLEAR N/A | DWG. TYPE DETAIL | SHOWN ON | SCALE 1/4 | DO NOT SCALE PRINTS
MICROFILMED | DESIGN ACCT. NO. | CATEGORY CODE | DWG. NO. 21F9054 | SIZE | REV. 3