NOTES (UNLESS OTHERWISE SPECIFIED):

1) DIMENSIONS IN INCHES.

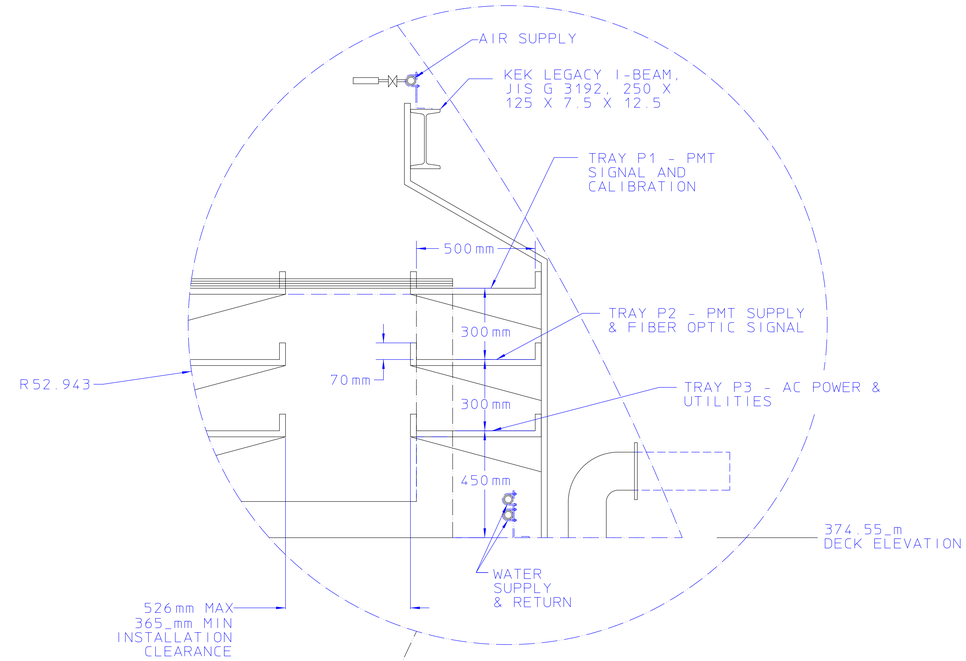

DETAIL A

SCALE = 1/10

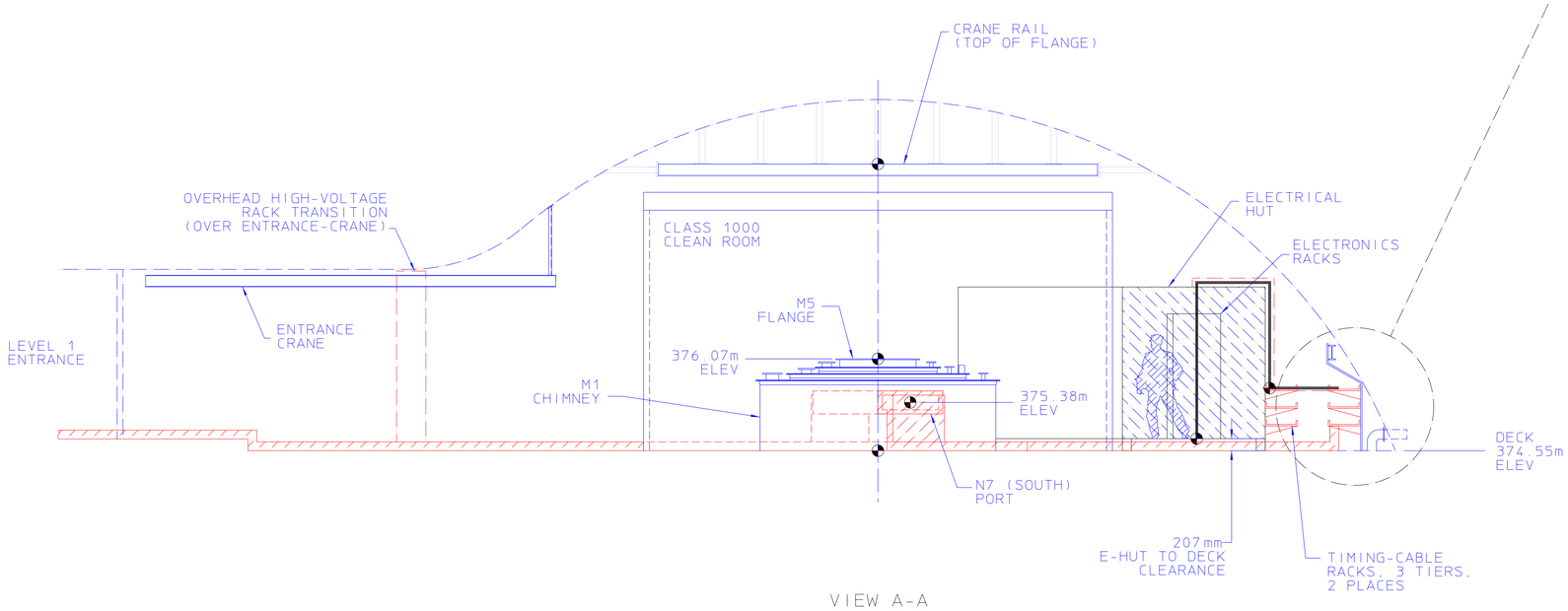

VIEW A-A

SCALE = 1/40

SEE DRAWING 21F9006 FOR SOURCE VIEW

21F9016

ITEM	REQD	PART NO.	DESCRIPTION

REV	DWG	CHK	ZONE	DATE	CHANGES

UNLESS OTHERWISE SPECIFIED
TOLERANCES: .X ± .1 FRAC. ± 1/64; .XX ± .01 ANGLES ± 0.5°; .XXX ± .005 FINISH 125
THREADS ARE CLASS 2
CHAMFER ENDS OF ALL SCREW THREADS 30° (U) 1.5 PITCH THRD. RELIEF WITH ROUND NOSE TOOL ON MACHINE CUT THREADS.
BREAK EDGES: .016 MAX. ON MACHINED WORK
REMOVE BURRS WELD SPLATTER & LOOSE SCALE
REF: ASME Y14.5M & ANSI B46.1

SHOP ORDERS
ACCT. NO. | SERIAL NO.
DATE ISSD | DATE REQD | NO. REQD.
DELIVER TO
SURFACE TREATMENT: CLEAN
IDENT METH: TAG
DWG BY: PAL DATE: 05-09-00
CHK BY: CGF DATE: 06-30-00

LAWRENCE BERKELEY NATIONAL LABORATORY
UNIVERSITY OF CALIFORNIA-BERKELEY
KamLAND
INSTALLATION
GENERAL ARRANGEMENT, ELEVATION

PATENT CLEAR | DWG. TYPE: ASSY | SHOWN ON | SCALE 1/40 | DO NOT SCALE PRINTS
MICROFILMED | DESIGN ACCT. NO. | CATEGORY CODE | DWG. NO. 21F9016 | SIZE | REV. 0