LBNL-40963
UC-406

ERNEST ORLANDO LAWRENCE
BERKELEY NATIONAL LABORATORY

CONF-9710124--

Rigid, Adjustable Support of Aligned Elements via Six Struts

MASTER

William Thur, Ted Lauritzen, Richard DeMarco,
Bill Baldock, and Ken Rex

Engineering Division

DISTRIBUTION OF THIS DOCUMENT IS UNLIMITED

October 1997

RECEIVED
FEB 17 1998
OSTI

Presented at the
Fifth International Workshop on Accelerator Alignment,
Argonne, IL,
October 13–17, 1997,
and to be published in
the Proceedings

19980402 094

DTIC QUALITY INSPECTED 3

DISCLAIMER

This document was prepared as an account of work sponsored by the United States Government. While this document is believed to contain correct information, neither the United States Government nor any agency thereof, nor The Regents of the University of California, nor any of their employees, makes any warranty, express or implied, or assumes any legal responsibility for the accuracy, completeness, or usefulness of any information, apparatus, product, or process disclosed, or represents that its use would not infringe privately owned rights. Reference herein to any specific commercial product, process, or service by its trade name, trademark, manufacturer, or otherwise, does not necessarily constitute or imply its endorsement, recommendation, or favoring by the United States Government or any agency thereof, or The Regents of the University of California. The views and opinions of authors expressed herein do not necessarily state or reflect those of the United States Government or any agency thereof, or The Regents of the University of California.

Ernest Orlando Lawrence Berkeley National Laboratory
is an equal opportunity employer.

DISCLAIMER

Portions of this document may be illegible in electronic image products. Images are produced from the best available original document.

LBNL-40963
UC-406

Rigid, Adjustable Support of Aligned Elements via Six Struts

William Thur, Ted Lauritzen, Richard DeMarco, Bill Baldock, and Ken Rex

Engineering Division
Ernest Orlando Lawrence Berkeley National Laboratory
University of California
Berkeley, California 94720

October 1997

This work was supported by the Director, Office of Energy Research, Office of Basic Energy Sciences, of the U.S. Department of Energy under Contract No. DE-AC03-76SF00098.

RIGID, ADJUSTABLE SUPPORT OF ALIGNED ELEMENTS VIA SIX STRUTS

William Thur, Ted Lauritzen, Richard DeMarco, Bill Baldock, Ken Rex
Lawrence Berkeley National Laboratory
One Cyclotron Road, Berkeley, Ca. 94720
October, 1997

At particle accelerators around the world, a great deal of effort is expended on determining precise component locations in space. Much less effort is spent on the design of systems to precisely and solidly locate these components in space, once we have the ability to know where they are. Unfortunately, there are many inadequate ways of adjustably mounting position sensitive beamline hardware, and only a few methods which work well. Traditional jacking screw and shimming support systems are often troublesome, and a drain on manpower and time. Multiple precision stages of adequate capacity for heavy items are expensive. At Lawrence Berkeley National Laboratory's Advanced Light Source, we rely almost exclusively on our home-grown, simple, and cost effective "six-strut" mechanical support systems. This approach meets our seismic requirements, minimizes vibration, and allows easy and precise alignment of a wide variety of accelerator hardware.

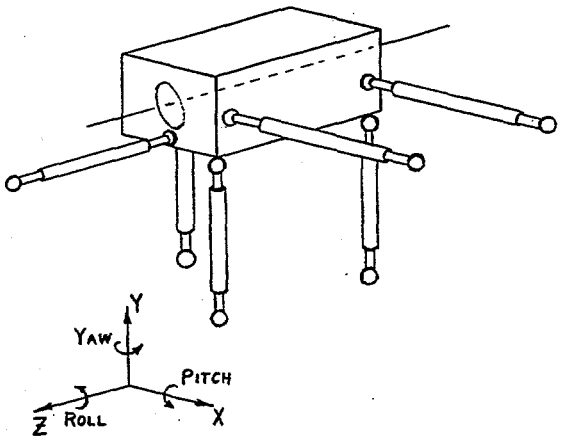

Figure 1 Six struts – six degrees freedom

Variations of the "Six Strut" support system are used on hundreds of position sensitive components in the ALS accelerator, storage ring and beamlines. The basic idea is simple: The position of a rigid body in space has six degrees of freedom; translational: - X, Y, Z; and angular: - pitch, roll, and yaw. A support system which uses six of orthogonal links, or struts, provides "kinematic" support, that is, just enough support with no additional constraints which could stress and distort the body itself. The struts have ball jointed end connections, and are arranged orthogonally to simplify position adjustments.

This work was supported by the Director, Office of Energy Research, Office of Basic Energy Sciences, of the U.S. Department of Energy under Contract No. DE-AC03-76SF00098.

Each strut is extremely rigid along its axis, and the six struts working together provide very solid (and seismically adequate) support of the equipment. It is usually possible to make the overall system rigid enough so that natural frequencies of vibration are above 20 Hz. In practice, this eliminates nearly all floor transmitted vibration. These stiff support systems can be made to be very precisely adjustable with the use of "differential threads" in the struts. In this case, the struts are not turnbuckles; both threads are right handed, but one is coarse thread and the other is fine thread. A common net ratio is 1.0 mm change in length per turn of the strut body. Modified ball joint rod ends are used with tightly fitting ball elements which are bolted to solid supports. The end result is almost ideal: A strong, rigid system which allows the position of heavy equipment to be easily adjusted and fixed in all six degrees of freedom with .0005 inch (10 micron) sensitivity over a generous range of travel.

Experience has shown that wide variations in the configuration of the supported equipment do not allow "standard" six strut systems. Instead, we have standardized on several sizes of strut components, but their lengths and orthogonal positioning are tailored to specific hardware configurations. This case of adaptation for individual component requirements is a significant benefit for the designer. Many variations of the six strut system are possible. An example is shown in Figure 2.

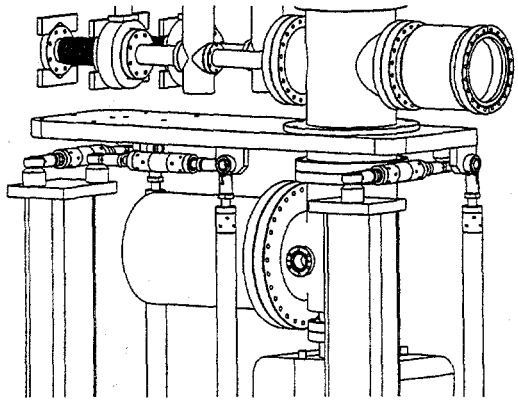

Figure 2 A typical six-strut

The following principles should be followed when designing a six-strut support system:

- Keep the struts orthogonal to each other - three in one dimension, two in another, and a single strut in the third dimension. Tips: put three struts in the dimension in which rigidity (vibration resistance) is most critical. This is usually the vertical, but not always. Since the angular "yaw" alignment is usually important, two horizontal struts are often placed transverse to the particle beam axis. The single strut is then placed parallel to the beam, where rigidity is least important.

- Use long struts wherever possible - long struts minimize the arc "cosine effects" which cause minor coupling of otherwise independent axes. Vertical struts can extend all the way to the floor.

- Space parallel struts as far apart as possible so that angular adjustments (pitch, roll, and yaw) are less sensitive and more rigid.

- To minimize cross-coupling of adjustments, try to mount the movable ends of the three parallel struts in a plane which passes through the aligmnent-critical parts of the hardware. Ideally, the movable ends of the two parallel struts should lie on or near a line which passes through the alignment-critical part of the hardware. For optimum rigidity, the axis of the single strut would be aligned with the center of mass.

- For equipment which is extemely position sensitive, thermal expansion of the struts can become important, even in a temperature controlled environment. Invar strut components have been used in some cases.

Figure 3 shows a reasonable set of compromises. The struts are long and well separated. Two simple pedestals are tucked under the equipment to maintain a narrow footprint on the restricted floorspace. The lower and upper faces of the equipment are kept clear for vacuum pumping ports or other access.

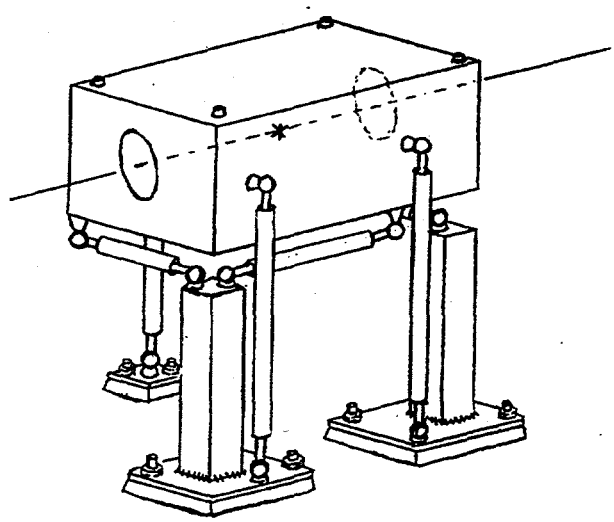

Figure 3 A good strut configuration

To illustrate the motives for these recommendations, consider the badly designed six strut support system in Figure 4: a small, low table top supported by six short struts carries a tall experimental setup which must align with the accelerator beam. This is a functional six strut system, but the short struts cause significant cross coupling of adjustments due to "cosine errors" over normal adjustment ranges. The close separation of parallel struts makes angular adjustments very sensitive, and encourages angular modes of vibration due to the low angular stiffness. The considerable height of the equipment above the movable ends of the vertical struts causes further cross-coupling - for example, an angular "roll" adjustment will cause unwanted transverse movement of the equipment. All of these problems were minimized in the previous sketch.

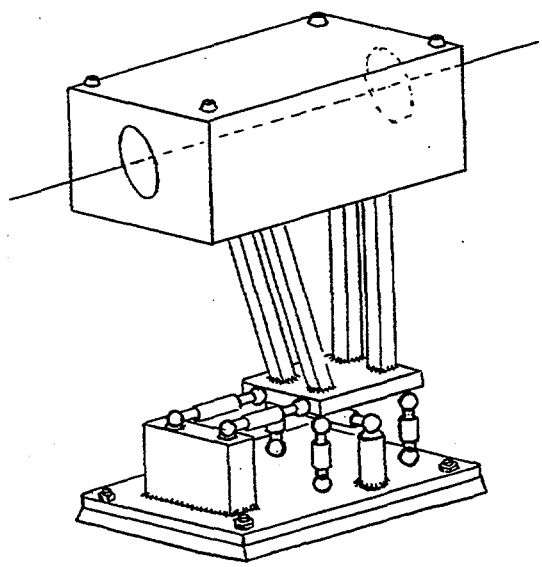

Figure 4 "How not to do it"

One important note on safety: because the six strut system does not overconstrain the supported equipment, the equipment will fall down if any one strut is disconnected from its mounting! This not entirely obvious point should be emphasized to all those working on the hardware.

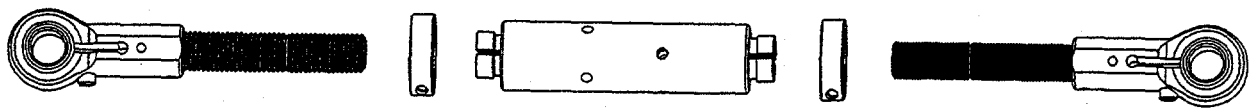

Figure 5 Strut hardware

Strut Hardware: Many detailed variations of strut components have been used at the Advanced Light Source, in both English and Metric designs. The ball-jointed end attachments are usually provided by commercial "rod end bearings". For a rigid system, the normal working clearances or " slop" in the rod end ball fit must be eliminated. This has been done by special-ordering quantities of rod ends with "tight-swaged" balls to our specifications, and also by modifying "off the shelf rod ends with a slot and pinch bolt. A threaded collet arrangement is used to join the rod end bearing to the strut body. An important point is that the collet clamp ring is not used to loosen nor lock this joint during the length adjusting process. Instead, it is adjusted to a specified "breakaway torque" at assembly, and left alone. The collet is set to be stiff enough to prevent casual twisting by hand, but loose enough for smooth operation with a pin spanner wrench applied to the strut body. This setting eliminates all backlash or "slop" at this joint, with no need for any final tightening nor clamping after an ideal adjustment is achieved. Thus, there is no disturbance of critical adjustments, - a big advantage over most other systems.

Strut Sizes: We have found that three basic strut sizes cover our needs at the Advanced Light Source. The designs are based on 1/2", 3/4, and 1" (or 14 mm, 20 mm, and 30 mm) rod end bearings. (Rod ends are sized by the diameter of the hole in the ball.) These struts may be bolted solidly in place using 1/2", 3/4", and 1" bolts, which do <u>not</u> act as pivot pins (this is the function of the ball). Generally, the 1/2" (14 mm) size components are suitable for equipment weighing less than 500 lbs. (225 kg.), the 3/4" (20mm) components are for equipment in the 500 to 1500 lbs. (225 to 680 kg.) range, and the 1" (30

mm) components are used for equipment weighing more than 1500 lbs. (680 kg.) or where an extremely stiff (vibration resistant) mounting is needed. Struts are fabricated in lengths specified by the designer, subject to minimum lengths. Adjustment range for differentially threaded struts is on the order of 1.25" (32mm), while similar turnbuckle (left and right hand thread) designs have larger adjustment ranges with coarser sensitivities.

At first glance, the six strut system may seem unorthodox or even complicated, but in reality it is a proven, simple, and cost effective way of rigidly supporting experimental hardware with precise adjustability in all six degrees of freedom. Please note, however, that there are some accelerator and beamline components which are not especially "position sensitive". For example, simple beam pipes, valves, and bellows with position requirements coarser than 1 mm may be more economically supported by arrangements of double-nutted threaded rods with spherical washer sets in oversize clearance holes. Clamp bolts in slotted holes and various shimming arrangements can also be used if the necessary degrees of freedom are provided. In our experience, these cruder adjustment approaches should not be used if positioning requirements are tighter than ± 1 mm. In these cases, a six strut system will be well worthwhile.