NOTES (UNLESS OTHERWISE SPECIFIED):

1) DIMENSIONS IN INCHES.

21F9792	ITEM	REQD	PART NUMBER	DESCRIPTION
	1	1	21F9724	MOUNT, SINGLE V-GROOVE
	2	4	21F9741	INSERT, MOUNT, V-GROOVE
	3	A/R		EPOXY, SHELL EPON 828 + EPICURE 3140 OR EQL

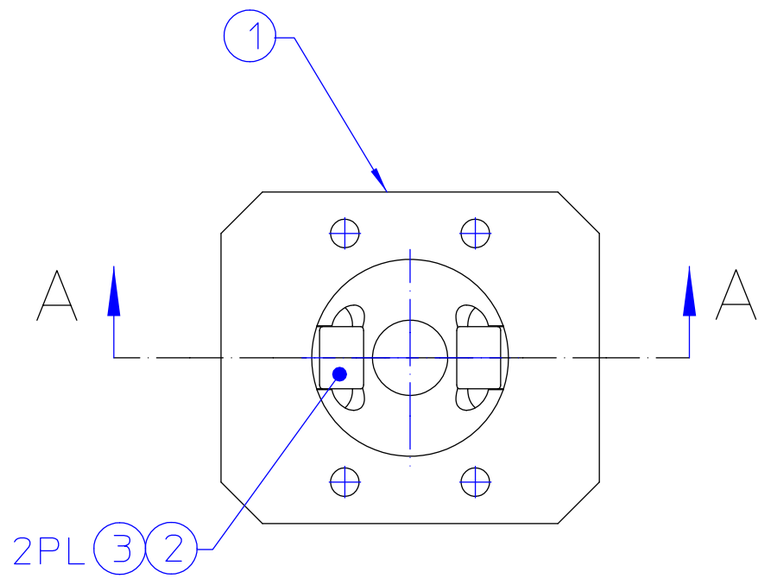

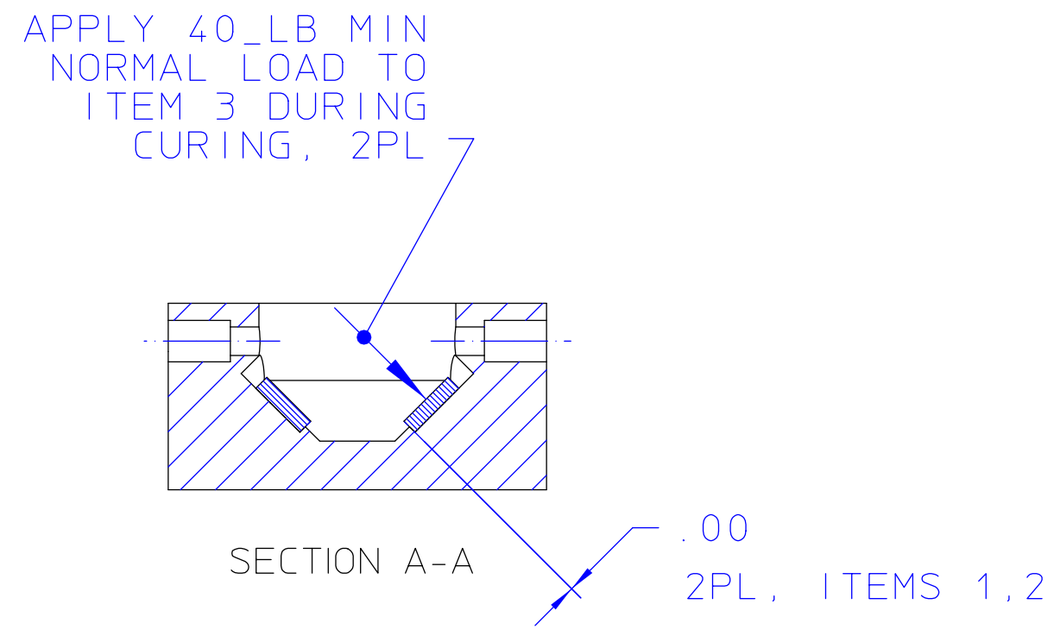

REV	DWN	CHK	DATE	DESCRIPTION

UNLESS OTHERWISE SPECIFIED

TOLERANCE .X ±.1 .XX ± .01 .XXX ±.005

ANGLES: ± 0.5° SURFACE FINISH 125 √

1. SAWED, FLAMECUT, SHEARED OR CUT STOCK FINISH.
2. THREADS CLASS 2.
3. CHAMFER ENDS OF ALL SCREW THRDS 30°.
4. 1 1/2 PITCH RELIEF WITH ROUND NOSE TOOL ON ALL MACHINE CUT THRDS.
5. BREAK EDGES 1/64 MAX. ON MACHINE WORK.
6. REMOVE BURRS, LOOSE SCALE AND WELD SPLATTER.
7. REF: ASME Y14.5M & ANSI B46.1.

SHOP ORDERS

ACCT NO	SER NO	
DATE ISSD	DATE REQD	NO REQD
DELIVER TO		
SURFACE TREATMENT	CLEAN	
IDENTIFIC METHOD	TAG	
DWG BY	PAL	DATE 10-26-00
CHK BY	PAL	DATE 11-29-00

LAWRENCE BERKELEY NATIONAL LABORATORY
UNIVERSITY OF CALIFORNIA-BERKELEY

VNL/HCX

HCX VESSEL SUPPORT

MOUNT DETAIL ASSY, SINGLE

PAT CLEAR	DWG TYPE	SHOWN ON	SCALE: 1/2
	DETAIL		DO NOT SCALE PRINTS
MICROFILMED	DESIGN ACCT NO ZHCXT1	CATEGORY CODE	DWG NO 21F9792 — REV 0