NOTES (UNLESS OTHERWISE SPECIFIED):

1. DIMENSIONS IN INCHES.

2 VACUUM TIGHT INNER WELD PER LBNL SPEC. M775B, PART 5.

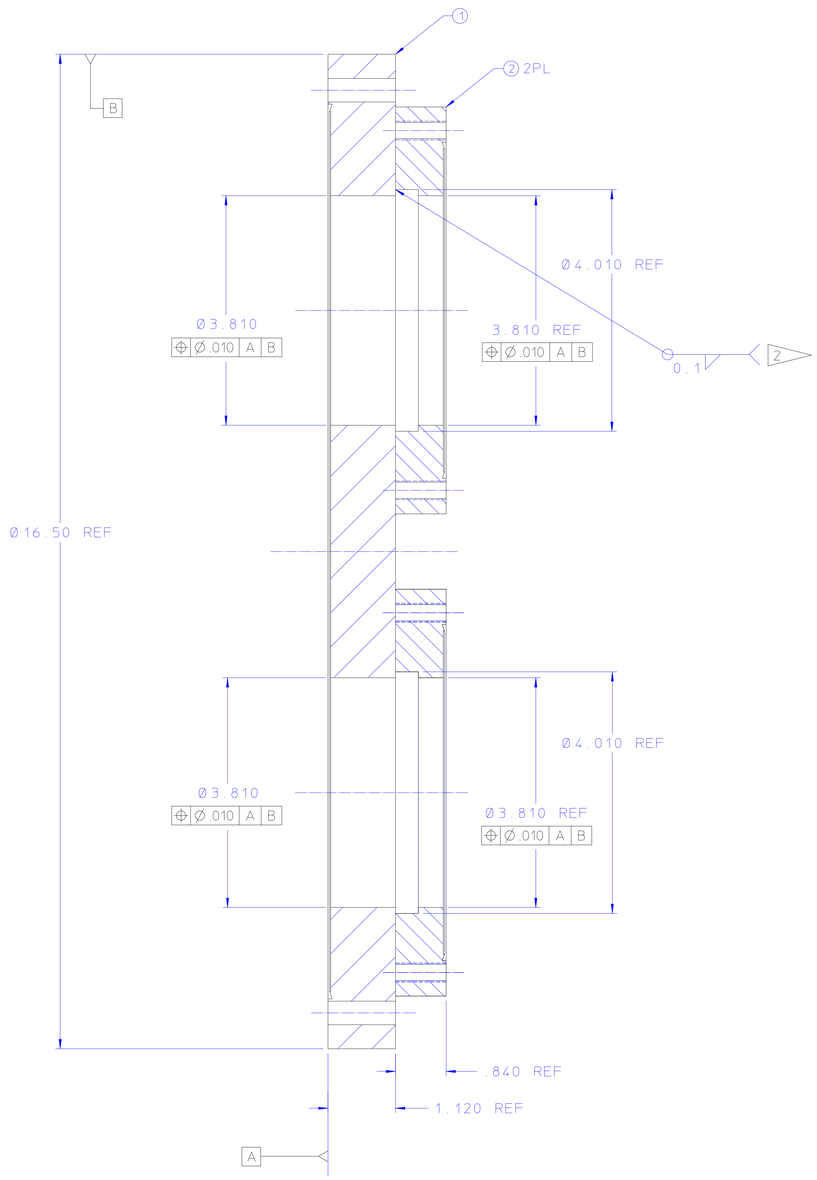

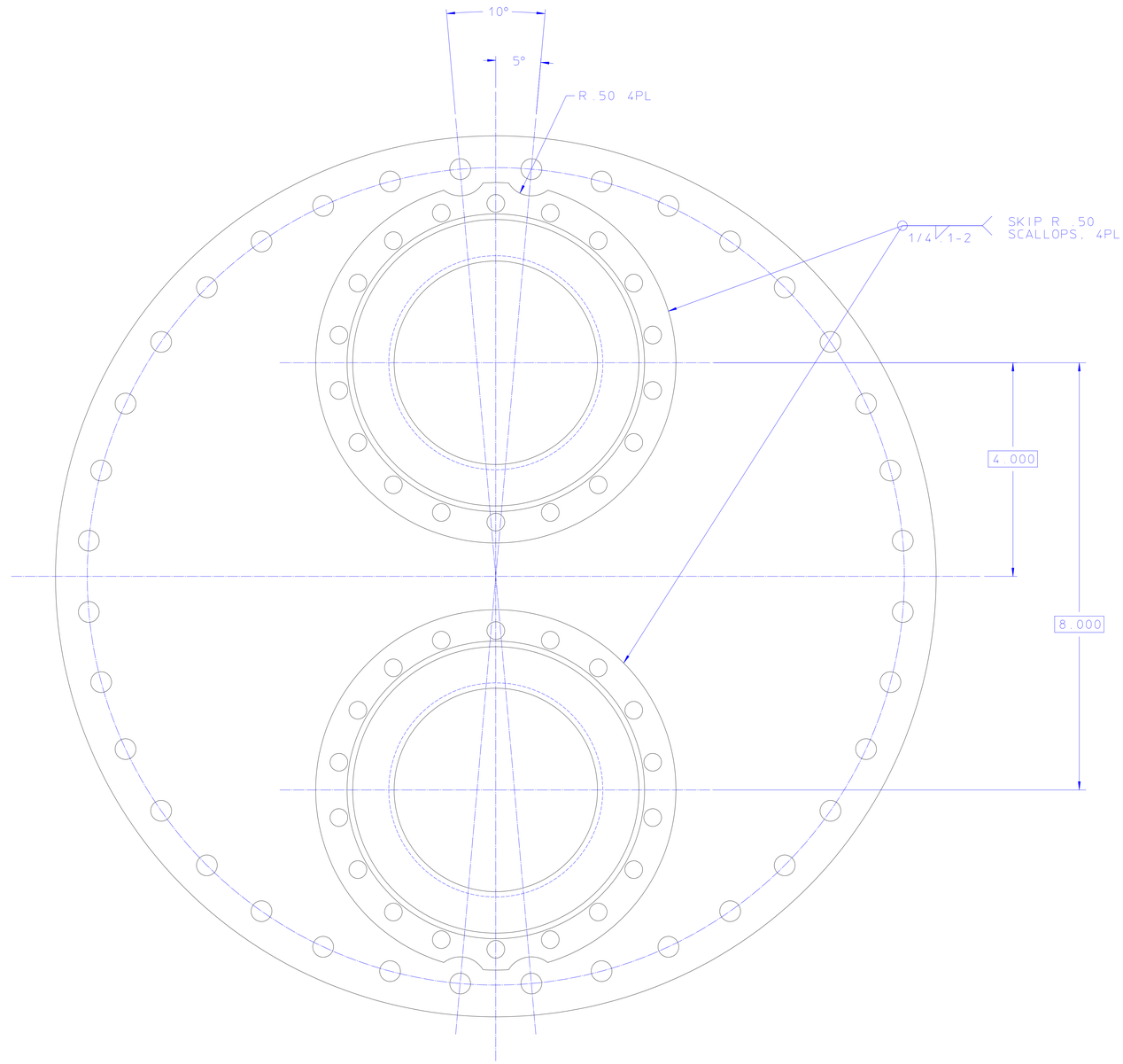

21F9786

ITEM	REQD	PART NO	DESCRIPTION
2	1		FLANGE, CONFLAT, 6-3/4", 4" ID NON-ROTATABLE, TAPPED HOLE, MDC P/N 130028 OR EQL
1	1		FLANGE, CONFLAT, 16-1/2", BLANK, NON-ROTATABLE, CLEARANCE HOLE, MDC P/N 110039 OR EQL

REV	DWG	CHK	ZONE	DATE	CHANGES
A	PL			05-11-01	CORRECTIONS - ITEM 2: "TAPPED HOLE" CALLOUT WAS "CLEARANCE HOLE", P/N 130028 WAS 110028. ITEM 1: P/N/ 110039 WAS 110040

UNLESS OTHERWISE SPECIFIED
TOLERANCES: .X ± .1 FRAC. ±1/64; .XX ± .01 ANGLES ± 0.5°; .XXX ± .005 FINISH 125
THREADS ARE CLASS 2.
CHAMFER ENDS OF ALL SCREW THREADS 30° CUT 1.5 PITCH THRD RELIEF WITH ROUND NOSE TOOL ON MACHINE CUT THREADS.
BREAK EDGES .016 MAX. ON MACHINED WORK
REMOVE BURRS WELD SPLATTER & LOOSE SCALE
REF: ASME Y14.5M & ANSI B46.1.

SHOP ORDERS
ACCT NO. | SERIAL NO.
DATE ISSD | DATE REQD | NO REQD
DELIVER TO
SURFACE TREATMENT: CLEAN
IDENT METH: TAG
DWG BY: PAL | DATE: 11-17-00
CHK BY: PAL | DATE: 11-17-00

LAWRENCE BERKELEY NATIONAL LABORATORY
UNIVERSITY OF CALIFORNIA-BERKELEY

VNL/HCX

HCX VESSEL SUPPORT

FLANGE, INTERFACE, DUAL

PATENT CLEAR	DWG. TYPE	SHOWN ON	SCALE	DO NOT SCALE PRINTS
	DETAIL		FULL	

MICROFILMED	DESIGN ACCT. NO.	CATEGORY CODE	DWG. NO.	SIZE	REV.
	ZHCXT1		21F9786		A