ITEM	REQD	PART NUMBER	DESCRIPTION
1	1		FLANGE, CONFLAT, 12", BLANK, NON-ROTATABLE, CLEARANCE HOLE, MDC P/N 110058 OR EQL
2	1		FLANGE, CONFLAT, 6-3/4", 4" ID NON-ROTATABLE, TAPPED HOLE, MDC P/N 130028 OR EQL

NOTES (UNLESS OTHERWISE SPECIFIED):

1. DIMENSIONS IN INCHES.

2. VACUUM TIGHT INNER WELD PER LBNL SPEC. M775B, PART 5.

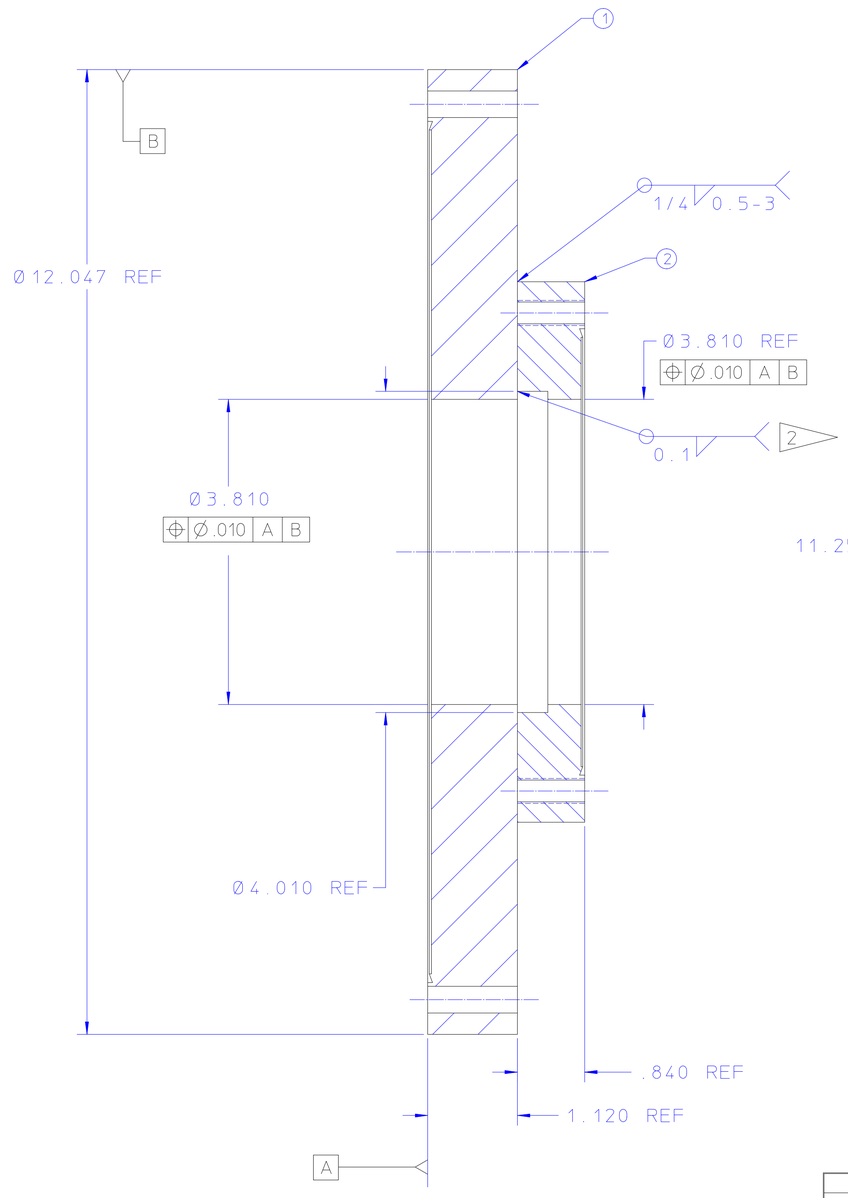

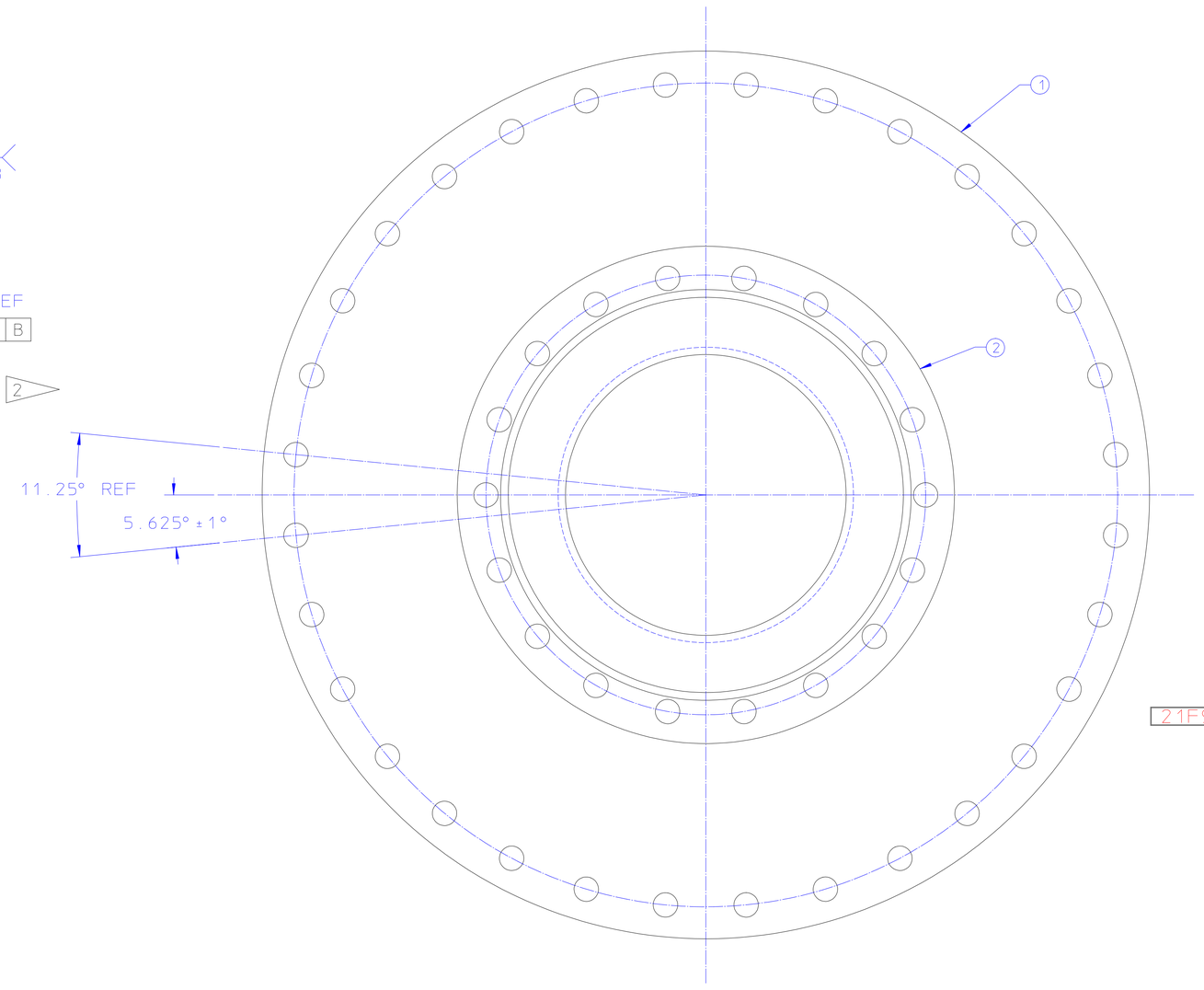

21F9774

REV	DWG	CHK	ZONE	DATE	CHANGES
A	PL	PL		05-11-01	CORRECTIONS - ITEM 2: CALLOUT "TAPPED HOLE" WAS "CLEARANCE HOLE". P/N 130028 WAS 110028. ITEM 1: P/N 110058 WAS 110059

UNLESS OTHERWISE SPECIFIED

TOLERANCES: .X ± .1 — FRAC. ± 1/64; .XX ± .01 — ANGLES ± 0.5°; .XXX ± .005 — FINISH 125√

THREADS ARE CLASS 2
CHAMFER ENDS OF ALL SCREW THREADS 30°.
CUT 1.5 PITCH THRD RELIEF WITH ROUND NOSE TOOL ON MACHINE CUT THREADS.
BREAK EDGES .016 MAX. ON MACHINED WORK.
REMOVE BURRS WELD SPLATTER & LOOSE SCALE
REF: ASME Y14.5M & ANSI B46.1.

SHOP ORDERS

ACCT. NO. | SERIAL NO.
DATE ISSD | DATE REQD. | NO REQD.
DELIVER TO
SURFACE TREATMENT: CLEAN
IDENT. METH: TAG
DWG BY: PAL — DATE 11-16-00
CHK BY: PAL — DATE 11-16-00

LAWRENCE BERKELEY NATIONAL LABORATORY
UNIVERSITY OF CALIFORNIA-BERKELEY

VNL/HCX

HCX VESSEL ASSEMBLY

FLANGE, INTERFACE, SINGLE

PATENT CLEAR	DWG. TYPE	SHOWN ON	SCALE	DO NOT SCALE PRINTS
	DETAIL		FULL	

MICROFILMED	DESIGN ACCT. NO.	CATEGORY CODE	DWG. NO.	SIZE	REV.
	ZHCXT1		21F9774		A