ITEM	REQD	PART NUMBER	DESCRIPTION

NOTES (UNLESS OTHERWISE SPECIFIED):
1) DIMENSIONS IN INCHES.

2) SUGGESTED VENDOR: STANDARD BELLOWS COMPANY, WINDOR LOCKS, CT. CONTACT: DAVID DIBATISTA (860) 623-2307. REF: QUOTE NO. 16021D.

3) SBC P/N 475-375-7-EE-6.75" CFF R, NR TYPE I FLANGE ASSY

4) AXIAL OFFSET = +/- 0.7"
LATERAL OFFSET = +/- 0.7"

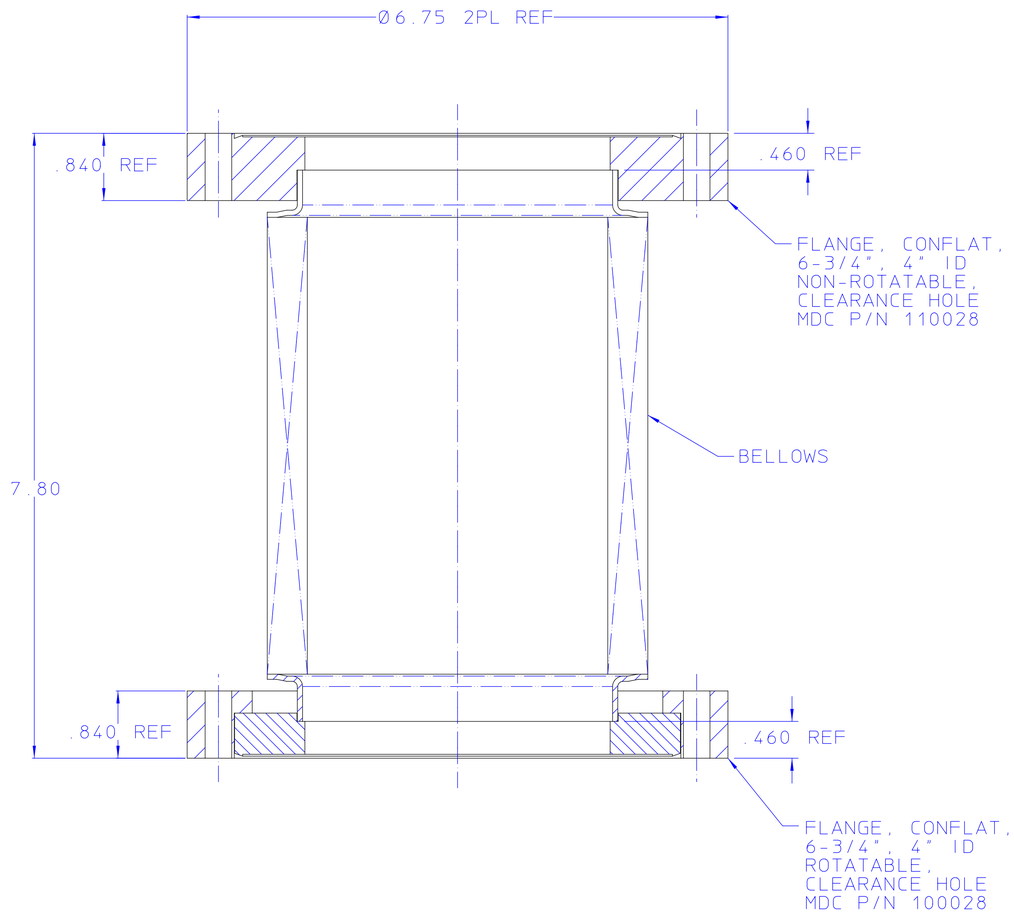

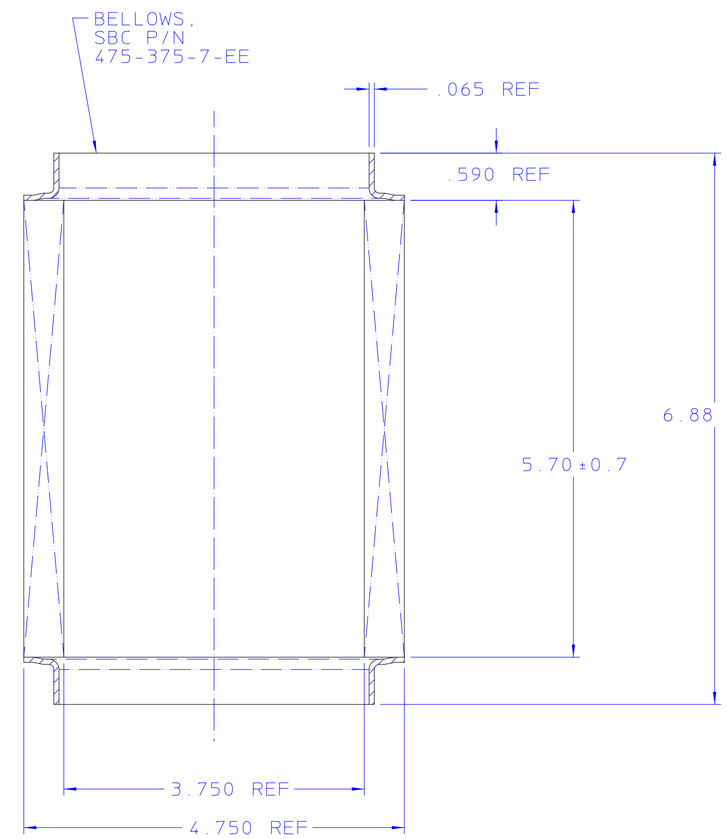

21F9764

REV	DWG	CHK	ZONE	DATE	CHANGES

UNLESS OTHERWISE SPECIFIED

TOLERANCES		
	.X ± .1	FRAC. ±1/64
	.XX ± .01	ANGLES ± 0.5°
	.XXX ± .005	FINISH 125√

THREADS ARE CLASS 2.
CHAMFER ENDS OF ALL SCREW THREADS 30°.
CUT 1.5 PITCH THRD RELIEF WITH ROUND NOSE TOOL ON MACHINE CUT THREADS.
BREAK EDGES .016 MAX. ON MACHINED WORK.
REMOVE BURRS WELD SPLATTER & LOOSE SCALE
REF: ASME Y14.5M & ANSI B46.1.

SHOP ORDERS

ACCT. NO.		SERIAL NO.
DATE ISSD	DATE REQD.	NO. REQD.
DELIVER TO		
SURFACE TREATMENT	CLEAN	
IDENT. METH.	TAG	
DWG BY	PAL	DATE 10-26-00
CHK BY	PAL	DATE 11-29-00

LAWRENCE BERKELEY NATIONAL LABORATORY
UNIVERSITY OF CALIFORNIA-BERKELEY

VNL/HCX

HCX VESSEL ASSEMBLY

SPOOL, BELLOWS

PATENT CLEAR	DWG. TYPE	SHOWN ON	SCALE	DO NOT SCALE PRINTS
	DETAIL		FULL	
MICROFILMED	DESIGN ACCT. NO.	CATEGORY CODE	DWG. NO.	SIZE / REV.
	ZHCXT1		21F9764	0