ITEM	REQD	PART NUMBER	DESCRIPTION
1	A/R		ROUND, 304 SST, Ø3.50
2	1		FLANGE, CONFLAT, 6-3/4", BLANK, NON-ROT, TAPPED HOLE, MDC P/N 130027 OR EQL

NOTES (UNLESS OTHERWISE SPECIFIED):

1. DIMENSIONS IN INCHES.
2. VACUUM TIGHT INNER WELD PER LBNL SPEC. M775B, PART 5.

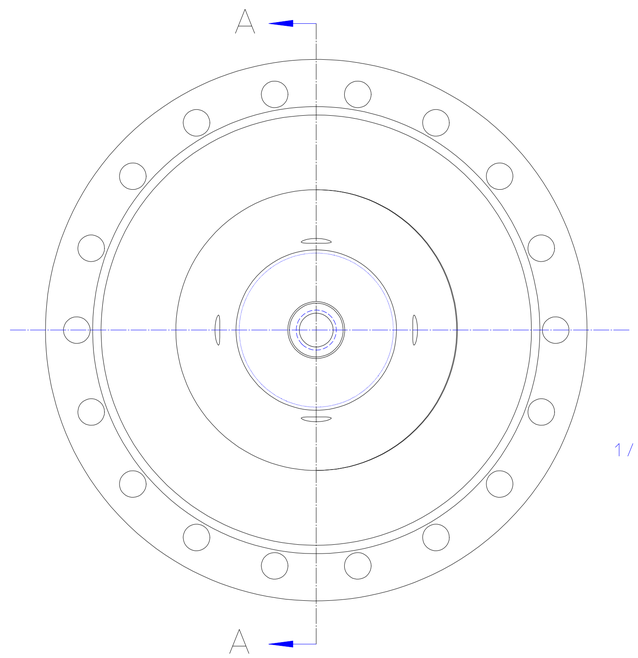

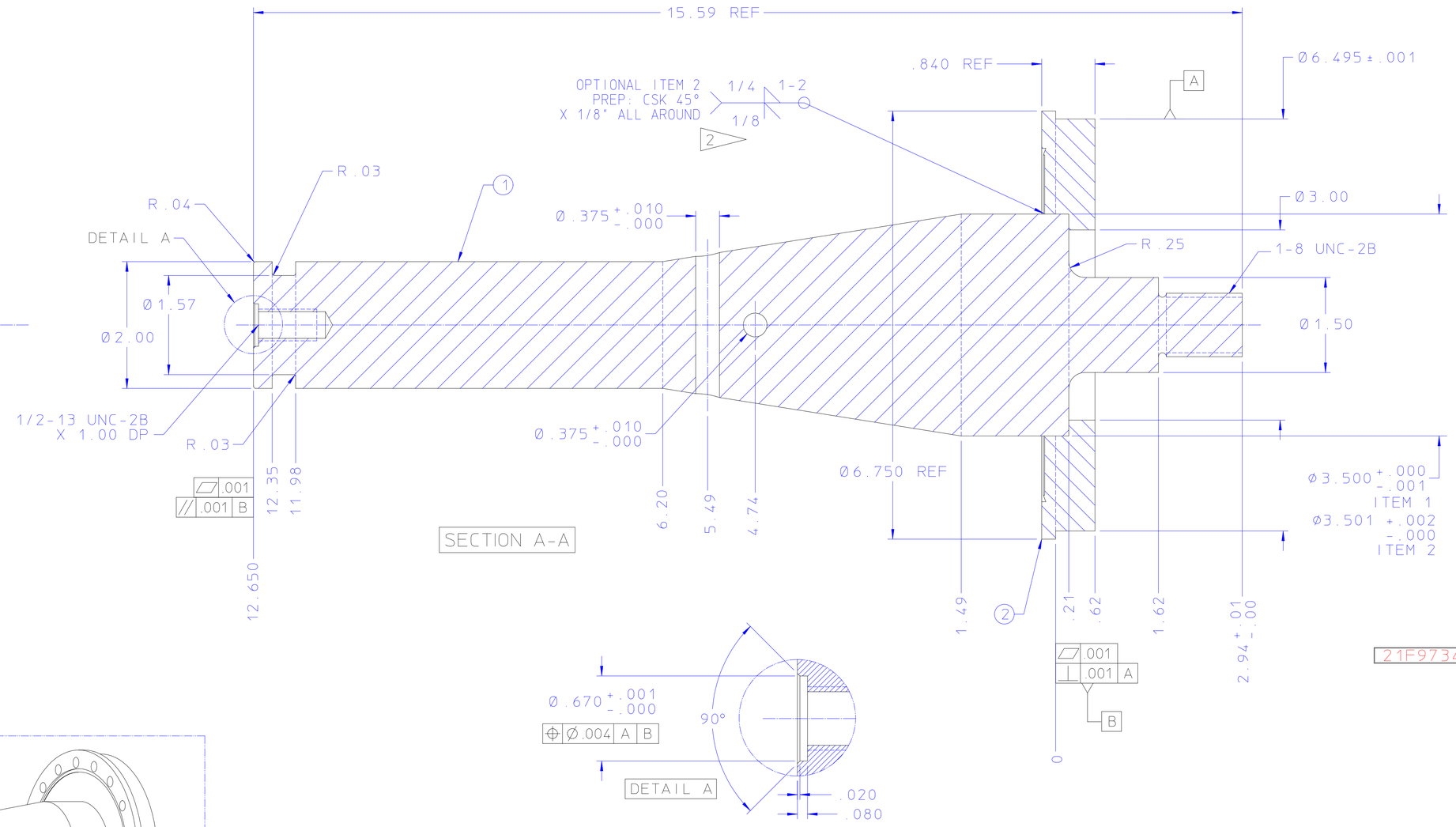

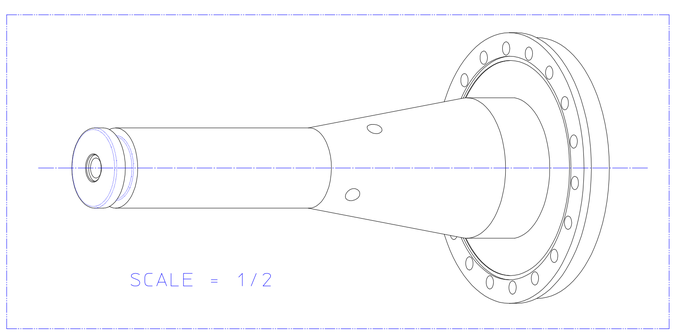

REV	DWG	CHK	ZONE	DATE	CHANGES
B	PL			04-25-01	Ø6.495+-.001 WAS Ø6.500+0-.001. ADDED 1/4" FILLET WELD AND C-SINK WELD PREP NOTE. R.25 DIM WAS OMITTED. 1-8 UNC CALLOUT WAS OMITTED. THREAD UNDERCUT ADDED. Ø3.50 +.000 -.001 (ITEM 1) DIM WAS BLOCK TOL. ADDED Ø3.501+.002-.000 ITEM 2 DIM. 2.94+.010-0 DIM WAS BLOCK TOL.
A	PL	PL		01-05-01	1/2-13 X 1.75 DP TAPPED HOLE WAS 1-8 X 1.75 DP

UNLESS OTHERWISE SPECIFIED
TOLERANCES: .X ± .1 — FRAC. ±1/64; .XX ± .01 — ANGLES ± 0.5°; .XXX ± .005 — FINISH 125√
THREADS ARE CLASS 2
CHAMFER ENDS OF ALL SCREW THREADS 30°.
CUT 1.5 PITCH THRD RELIEF WITH ROUND NOSE TOOL ON MACHINE CUT THREADS.
BREAK EDGES .016 MAX. ON MACHINED WORK
REMOVE BURRS WELD SPLATTER & LOOSE SCALE
REF: ASME Y14.5M & ANSI B46.1.

SHOP ORDERS
ACCT. NO. | SERIAL NO.
DATE ISSD | DATE REQD. | NO. REQD.
DELIVER TO.
SURFACE TREATMENT: CLEAN
IDENT. METH.: TAG
DWG BY: PAL — DATE: 11-20-00
CHK BY: PAL — DATE: 12-08-00

LAWRENCE BERKELEY NATIONAL LABORATORY
UNIVERSITY OF CALIFORNIA-BERKELEY
VNL/HCX
HCX VESSEL ASSEMBLY
ROD WELDMENT, RAIL SUPPORT

PATENT CLEAR	DWG. TYPE	SHOWN ON	SCALE	DO NOT SCALE PRINTS
	DETAIL		FULL	
MICROFILMED	DESIGN ACCT. NO.	CATEGORY CODE	DWG. NO.	SIZE / REV.
	ZHCXT1		21F9734	B