NOTES (UNLESS OTHERWISE SPECIFIED):

1) DIMENSIONS IN INCHES.

2) MATL: SST, 304.

ITEM	REQD	PART NUMBER	DESCRIPTION

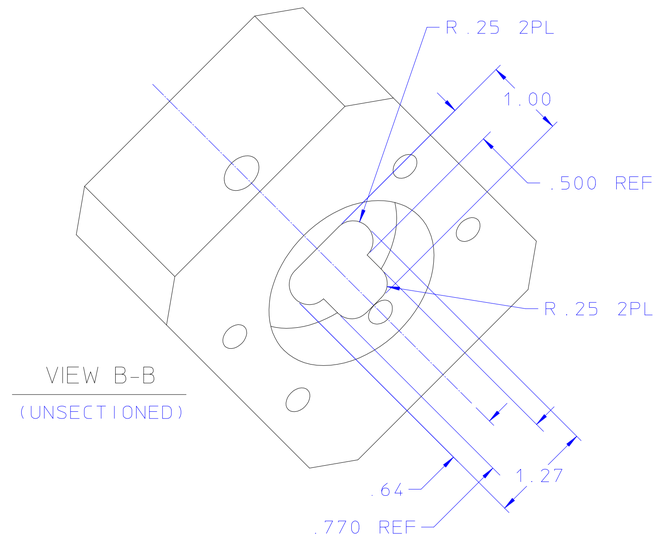

VIEW B-B

(UNSECTIONED)

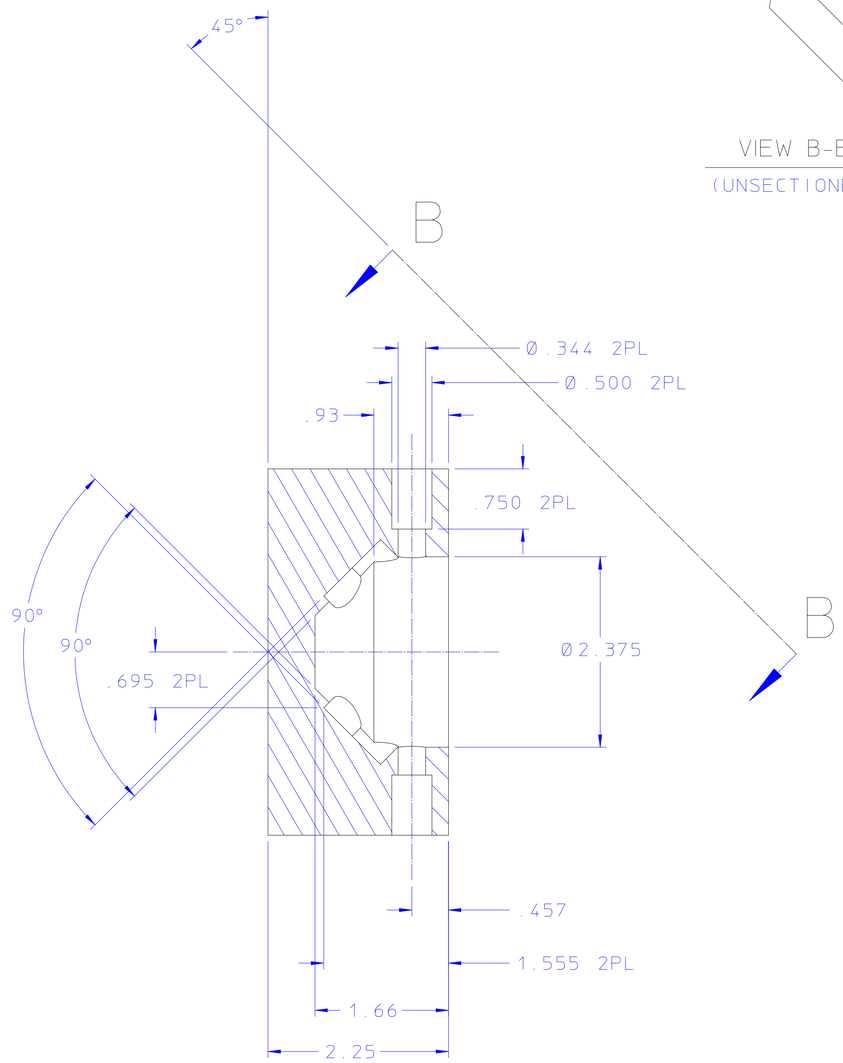

SECTION A-A

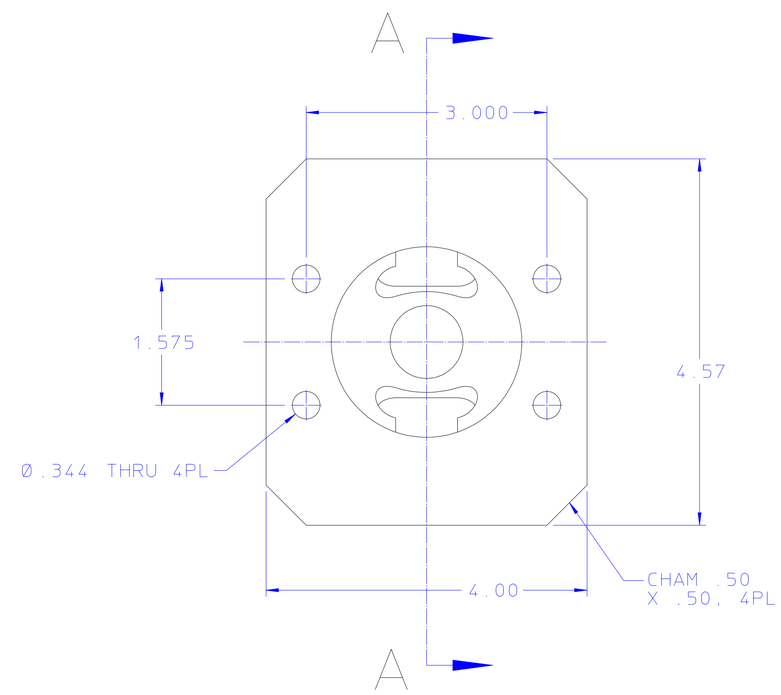

21F9724

REV	DWG	CHK	ZONE	DATE	CHANGES
A	PL			04-25-01	ADDED .500 REF AND .770 REF DIMS.

UNLESS OTHERWISE SPECIFIED

TOLERANCES: .X ± .1 — FRAC. ± 1/64; .XX ± .01 — ANGLES ± 0.5°; .XXX ± .005 — FINISH 125√

THREADS ARE CLASS 2
CHAMFER ENDS OF ALL SCREW THREADS 30°.
CUT 1.5 PITCH THRD RELIEF WITH ROUND NOSE TOOL ON MACHINE CUT THREADS.
BREAK EDGES .016 MAX. ON MACHINED WORK
REMOVE BURRS WELD SPLATTER & LOOSE SCALE
REF: ASME Y14.5M & ANSI B46.1.

SHOP ORDERS

ACCT. NO. | SERIAL NO.
DATE ISSD. | DATE REQD. | NO. REQD.
DELIVER TO
SURFACE TREATMENT: CLEAN
IDENT. METH.: TAG
DWG. BY: PAL — DATE: 11-16-00
CHK. BY: PAL — DATE: 12-08-00

LAWRENCE BERKELEY NATIONAL LABORATORY

UNIVERSITY OF CALIFORNIA-BERKELEY

VNR/HCX

HCX VESSEL SUPPORT

MOUNT, SINGLE V-GROOVE

PATENT CLEAR	DWG. TYPE	SHOWN ON	SCALE	DO NOT SCALE PRINTS
	DETAIL		FULL	
MICROFILMED	DESIGN ACCT. NO.	CATEGORY CODE	DWG. NO.	SIZE / REV.
	ZHCXT1		21F9724	A