NOTES (UNLESS OTHERWISE SPECIFIED):

1) DIMENSIONS IN INCHES.

2) PAINT: POWDER-COAT, COLOR: BLUE, RAL_5012, SMOOTH, GLOSSY, TIGER DRYLAC NO. 49/43170 OR EQL.

3) WEIGHT OF WELDMENT: 423_LB.

4) VENT ALL TRAPPED AIR VOLUMES WITH Ø 1/4_IN HOLES AS REQUIRED.

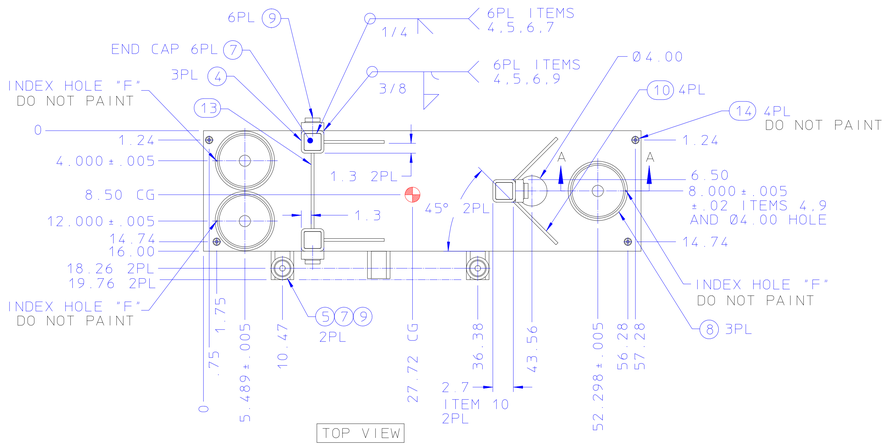

TOP VIEW

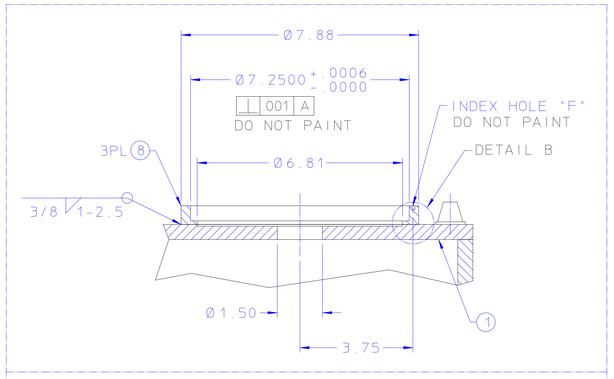

SECTION A-A

POST-WELD MACHINING
3PL, ITEMS 1,8
SCALE = 1/2

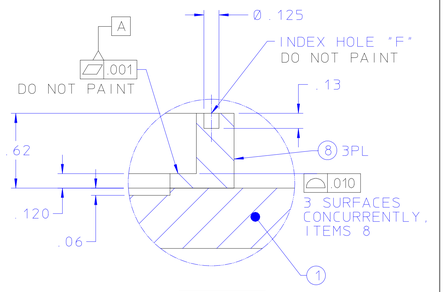

DETAIL B
SCALE = 2/1

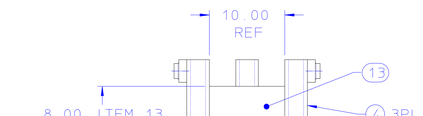

LEFT VIEW

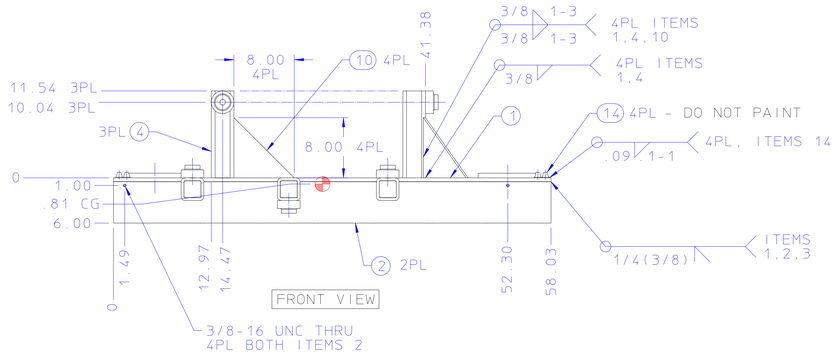

FRONT VIEW

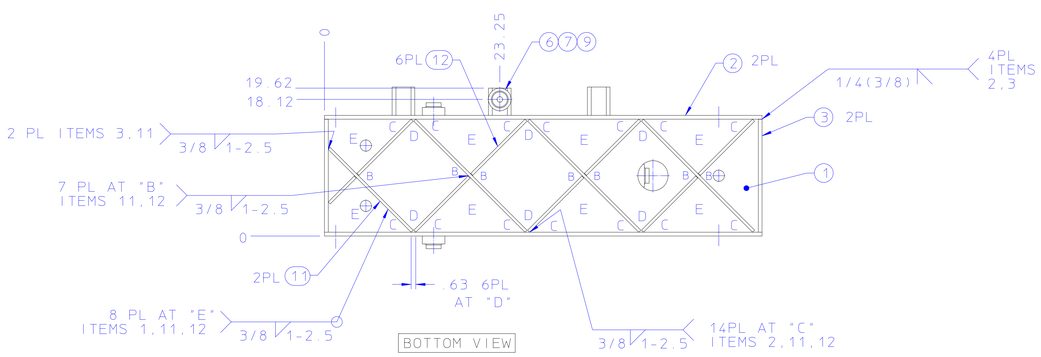

BOTTOM VIEW

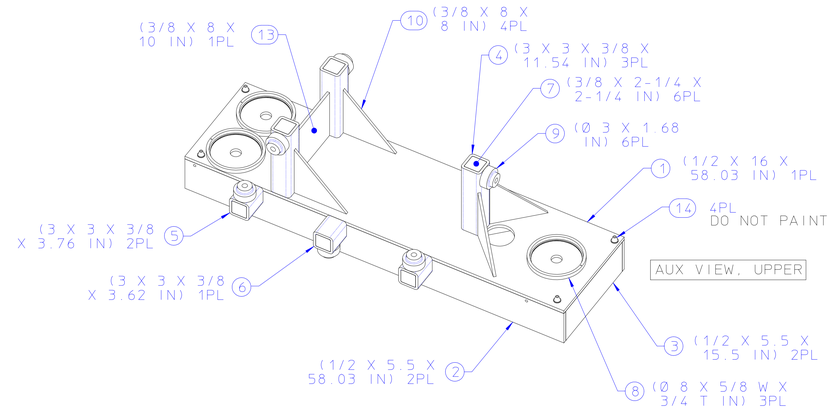

AUX VIEW, UPPER

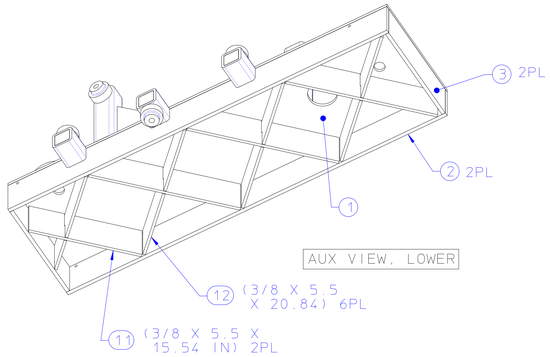

AUX VIEW, LOWER

21F9706

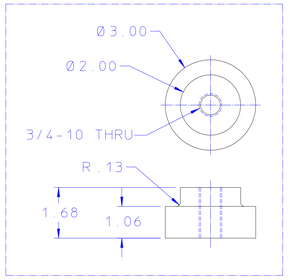

ITEM 9 DETAIL 6PL
SCALE = 1/2

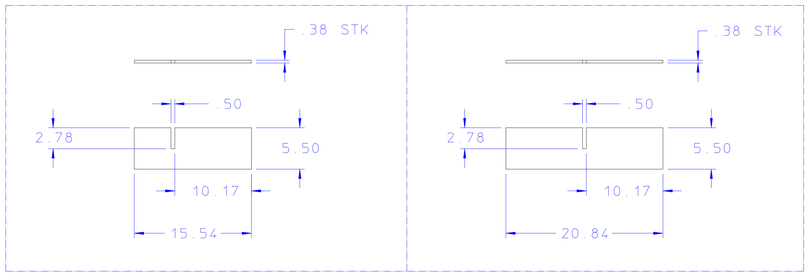

ITEM 11 DETAIL
2PL

ITEM 12 DETAIL
6PL

ITEM	REQD	PART NO.	DESCRIPTION
14	4	2005363	POST, FIDUCIAL, SURVEY
13	1		BAR, FLAT, STL, ASTM A-36, 3/8" THICK
12	6		BAR, FLAT, STL, ASTM A-36, 3/8" THICK
11	2		BAR, FLAT, STL, ASTM A-36, 3/8" THICK
10	4		BAR, FLAT, STL, ASTM A-36, 3/8" THICK
9	6		BAR, ROUND, STL, ASTM A-36, 3" DIA
8	3		BAR, FLAT, STL, ASTM A-36, 3/4" THICK OR PIPE, STL, AISI 1026, 8" OD X 5/8 WALL
7	6		PLATE, STL, 1018/1020, 3/8" THICK
6	1		TUBING, SQUARE, STL, ASTM A-36, 3" X 3" X 3/8" WALL
5	2		TUBING, SQUARE, STL, ASTM A-36, 3" X 3" X 3/8" WALL
4	3		TUBING, SQUARE, STL, ASTM A-36, 3" X 3" X 3/8" WALL
3	2		BAR, FLAT, STL, ASTM A-36, 1/2" THICK
2	2		BAR, FLAT, STL, ASTM A-36, 1/2" THICK
1	1		PLATE, STL, ASTM A-36, 1/2" THICK

REV	DWG	CHK	ZONE	DATE	CHANGES
C	PL	PL		03-01-01	Ø7.250 BORE, ITEM 8, WAS Ø7.125
B	PL	PL		01-16-01	NOTE 2 - STRESS RELIEF - DELETED. NOTES 3 TO 5 RENUMBERED 2 TO 4.
A	PL	PL		01-05-01	REFERENCE PART MATERIAL SIZES ADDED. NOTE 5 ADDED.

UNLESS OTHERWISE SPECIFIED
DIMENSIONS ARE IN INCHES
X ± .1 FRAC. ±1/64
XX ± .06 ANGLES ±0.5°
XXX ± .020 FINISH 125
THREADS ARE CLASS 2
CHAMFER ENDS OF ALL SCREW THREADS 30°.
CUT 1.5 PITCH THRD RELIEF WITH ROUND NOSE TOOL ON MACHINE CUT THREADS.
BREAK EDGES .016 MAX. ON MACHINED WORK.
REMOVE BURRS WELD SPLATTER & LOOSE SCALE
REF: ASME Y14.5M & ANSI B46.1

SHOP ORDERS
ACCT. NO.
SERIAL NO.
DATE ISSD
DATE REQD
NO. REQD
DELIVER TO
SURFACE TREATMENT SEE NOTE 3.
IDENT. METH. TAG
DWG BY PAL DATE 11-13-00
CHK BY PAL DATE 01-02-01

LAWRENCE BERKELEY NATIONAL LABORATORY
UNIVERSITY OF CALIFORNIA-BERKELEY

VNR/HCX
HCX VESSEL SUPPORT SYSTEM
STRUT PLATFORM

PATENT CLEAR | DWG. TYPE DETAIL | SHOWN ON | SCALE 1/8 | DO NOT SCALE PRINTS
MICROFILMED | DESIGN ACCT. NO. ZHCXT11 | CATEGORY CODE | DWG. NO. 21F9706 | SIZE | REV. C