NOTES (UNLESS OTHERWISE SPECIFIED):

1) DIMENSIONS IN INCHES.
2) STRESS RELIEVE AFTER WELDING.
3) PAINT: POWDER-COAT, COLOR: GREEN, RAL_6016, SMOOTH, GLOSSY, TIGER DRYLAC NO. 49/51020 OR EQL.
4) WEIGHT OF WELDMENT: 678_lb.
5) VENT ALL TRAPPED AIR VOLUMES WITH Ø 1/4_IN HOLES AS REQUIRED.

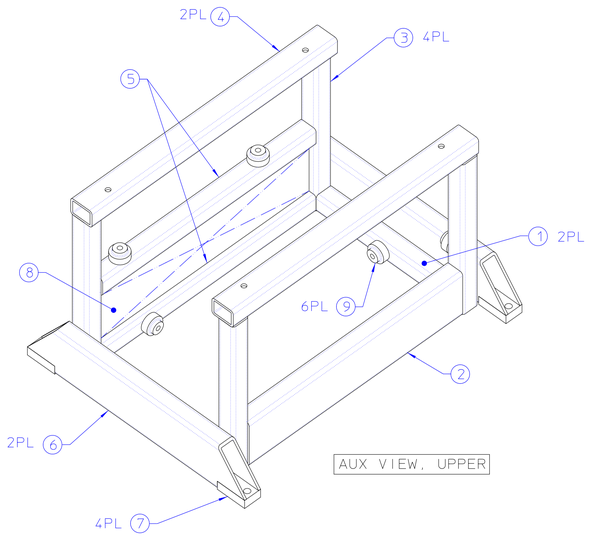

AUX VIEW, UPPER

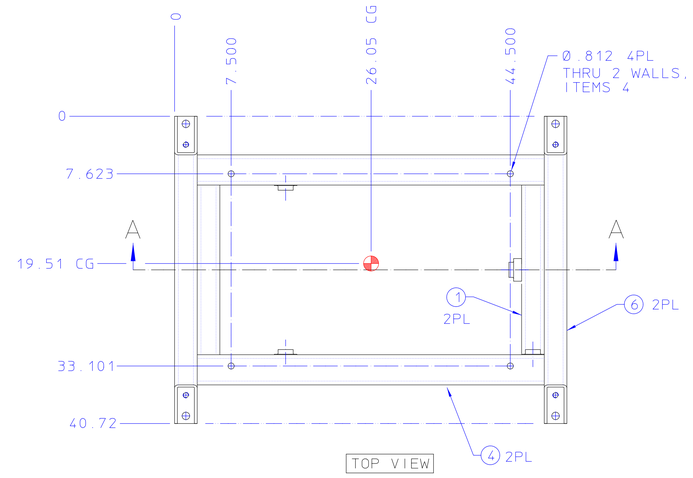

TOP VIEW

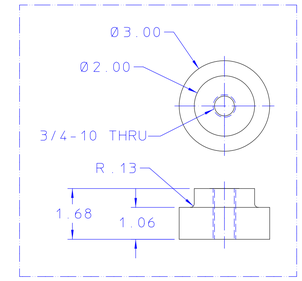

ITEM 9 DETAIL 6PL
SCALE = 1/2

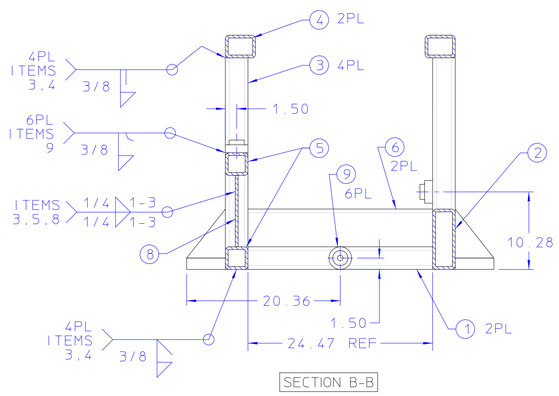

SECTION B-B

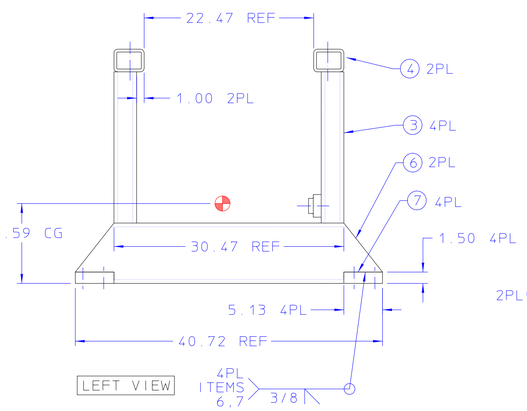

LEFT VIEW

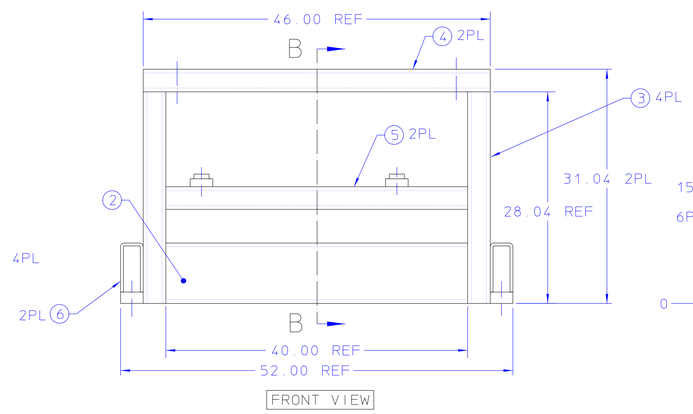

FRONT VIEW

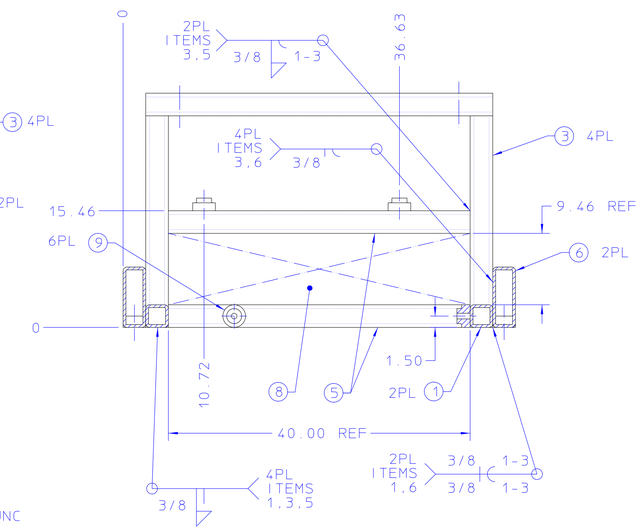

SECTION A-A

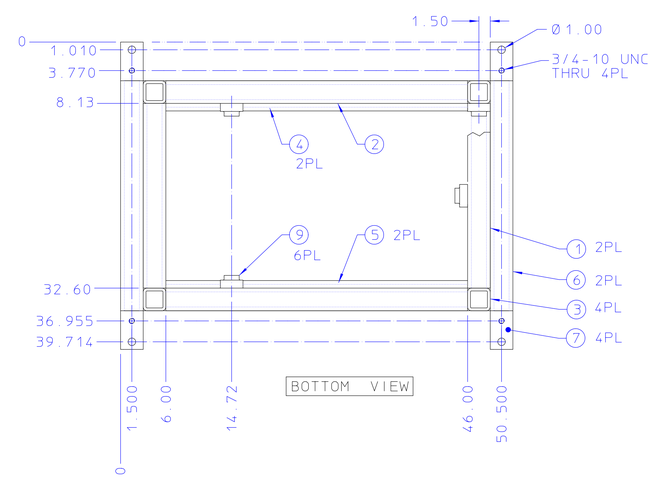

BOTTOM VIEW

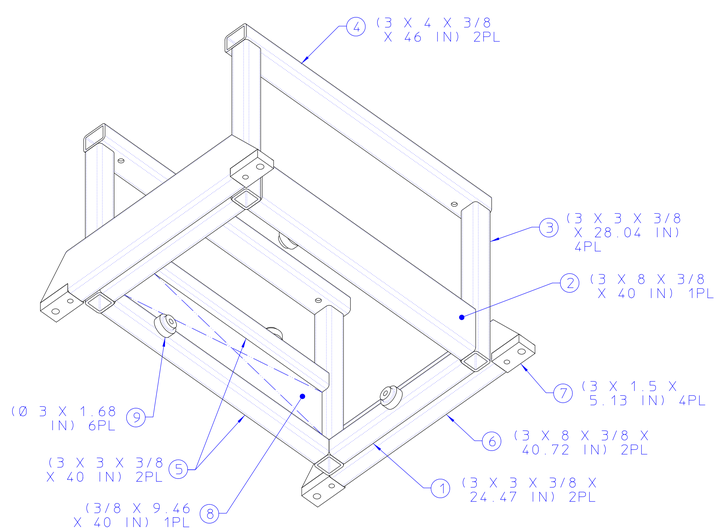

AUX VIEW, LOWER

21F9696

ITEM	REQD	PART NO	DESCRIPTION
9	6		BAR, ROUND, STL, ASTM A-36, 3" DIA
8	1		BAR, FLAT, STL, ASTM A-36, 3/8" THICK
7	4		BAR, FLAT, STL, ASTM A-36, 1-1/2" THICK
6	2		TUBING, RECTANGULAR, STL, ASTM A-36, 3" X 8" X 3/8" WALL
5	2		TUBING, SQUARE, STL, ASTM A-36, 3" X 3" X 3/8" WALL
4	2		TUBING, RECTANGULAR, STL, ASTM A-36, 3" X 4" X 3/8" WALL
3	3		TUBING, SQUARE, STL, ASTM A-36, 3" X 3" X 3/8" WALL
2	1		TUBING, RECTANGULAR, STL, ASTM A-36, 3" X 8" X 3/8" WALL
1	2		TUBING, SQUARE, STL, ASTM A-36, 3" X 3" X 3/8" WALL

REV	DWG	CHK	ZONE	DATE	CHANGES
A	PL	PL		01-05-01	REFERENCE PART MATERIAL SIZES ADDED. NOTE 5 ADDED.

UNLESS OTHERWISE SPECIFIED
TOLERANCES: X ± .1 FRAC. ± 1/64; XX ± .06 ANGLES ± 0.5°; XXX ± .020 FINISH 125
THREADS ARE CLASS 2
CHAMFER ENDS OF ALL SCREW THREADS 30° (U) 1.5 PITCH THRD RELIEF WITH ROUND NOSE TOOL ON MACHINE CUT THREADS.
BREAK EDGES: .016 MAX. ON MACHINED WORK
REMOVE BURRS WELD SPLATTER & LOOSE SCALE
REF: ASME Y14.5M & ANSI B46.1

SHOP ORDERS
ACCT. NO. | SERIAL NO.
DATE ISSD | DATE REQD | NO. REQD
DELIVER TO
SURFACE TREATMENT: SEE NOTE 3
IDENT METH: TAG
DWG: PAL DATE: 11-15-00
BY:
CHK: PAL DATE: 01-02-01
BY:

LAWRENCE BERKELEY NATIONAL LABORATORY
UNIVERSITY OF CALIFORNIA-BERKELEY
VNR/HCX
HCX VESSEL
FRAME, HCX VESSEL SUPPORT

PATENT CLEAR | DWG. TYPE: DETAIL | SHOWN ON | SCALE: 1/8 | DO NOT SCALE PRINTS
MICROFILMED | DESIGN ACCT. NO.: ZHCXT1 | CATEGORY CODE | DWG. NO.: 21F9696 | SIZE | REV.: A