REQ	ITEM	PART NUMBER	DESCRIPTION
			ø1.00 ROD, 17-4PH STAINLESS STEEL, CONDITION "A"

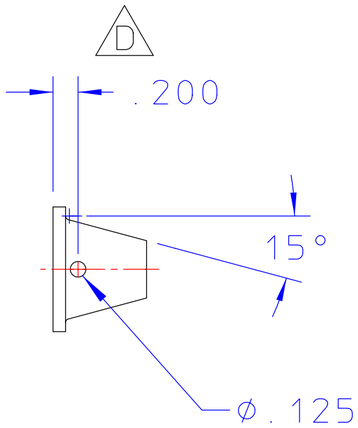

NOTES: UNLESS OTHERWISE SPECIFIED
1. HEAT TREAT IN INERT ATMOSPHERE FURNACE AT 900°F FOR 1 HOUR. FURNACE COOL. APPROXIMATE HARDNESS IS ROCKWELL "C" 45.

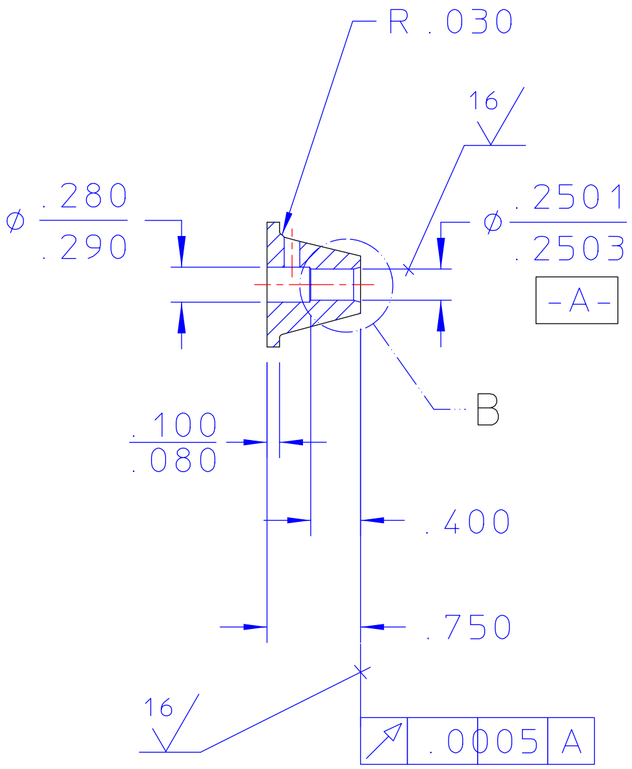

SECTION A-A

SCALE 1:1

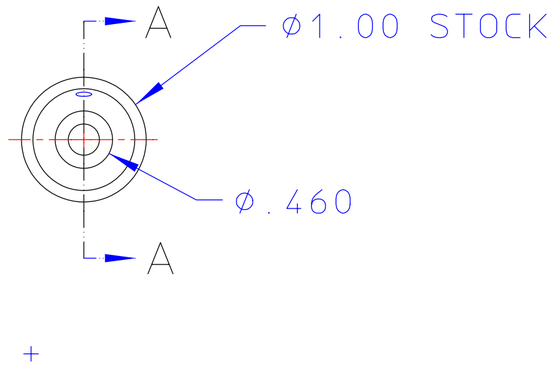

20Q5363D

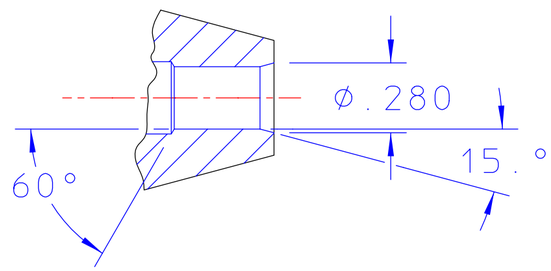

DETAIL B

SCALE 2:1

REV	DWG	CHK	ZONE	DATE	CHANGES
D	EF		D-4	1/27/89	DIM. .200 WAS .250 ±.020
C	JA			11/23/88	REDRAW CAD DRAWING
B	JWC			10/4/88	REDESIGNED

UNLESS OTHERWISE SPECIFIED

TOLERANCES			
	.X ±	FRAC. ±	
	.XX ±	ANGLES ± 1°	
	.XXX ± .010	FINISH 63 √	

THREADS ARE CLASS 2
CHAMFER ENDS OF ALL SCREW THREADS 30°.
CUT 1.5 PITCH THRD RELIEF WITH ROUND NOSE TOOL ON MACHINE CUT THREADS.
BREAK EDGES .015 MAX. ON MACHINED WORK
REMOVE BURRS WELD SPLATTER & LOOSE SCALE
REFERENCES: ANSI Y14.5 & B46.1.

SHOP ORDERS

ACCT. NO.	SERIAL NO.	
DATE ISSD.	DATE REQD.	NO. REQD.
DELIVER TO		
SURFACE TREATMENT	DEGREASE	
IDENT. METH.	TAG	
DWG. BY	J.AKRE	DATE 11-23-88
CHK. BY	T.LAURITZEN	DATE 1-27-89

LAWRENCE BERKELEY LABORATORY
UNIVERSITY OF CALIFORNIA-BERKELEY

ALS SURVEY
FIXTURES
SURVEY FIDUCIAL POST

PATENT CLEAR	DWG. TYPE	SHOWN ON	SCALE	DO NOT SCALE PRINTS
	C-DETAIL		1 : 1	
MICROFILMED	DESIGN ACCT. NO.	CATEGORY CODE	DWG. NO.	SIZE / REV.
		AL0907	20Q5363	D