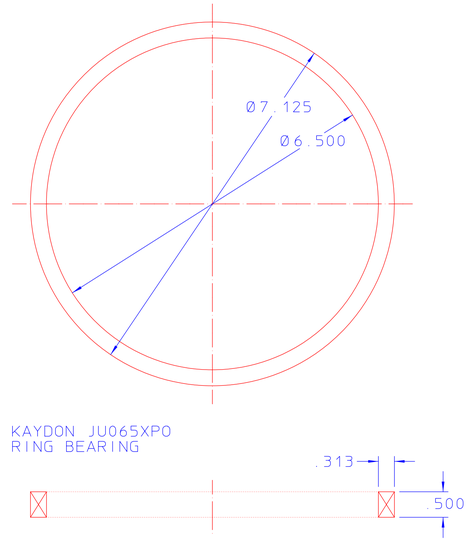
Ø7.125
Ø6.500
KAYDON JU065XPO
RING BEARING
.313
.500

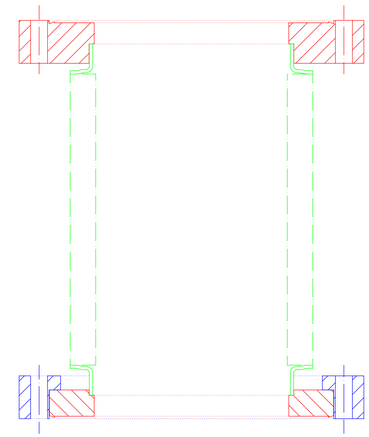
SPOOL, BELLOWS, SBC NO.
475-375-7-EE-6-3/4"CFF R,NR

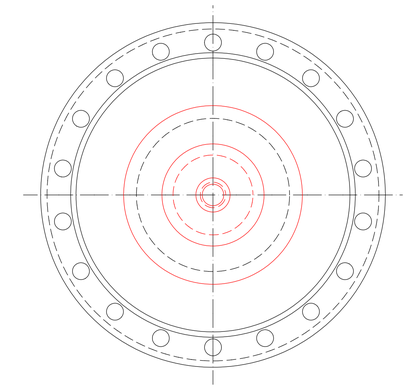

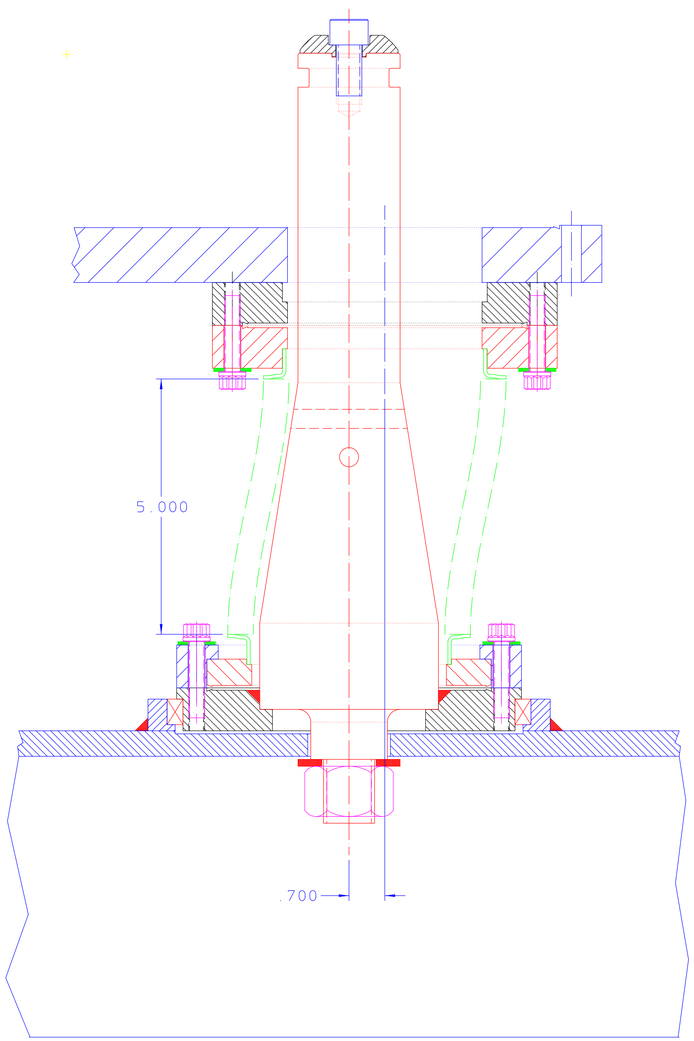
5.000
.700

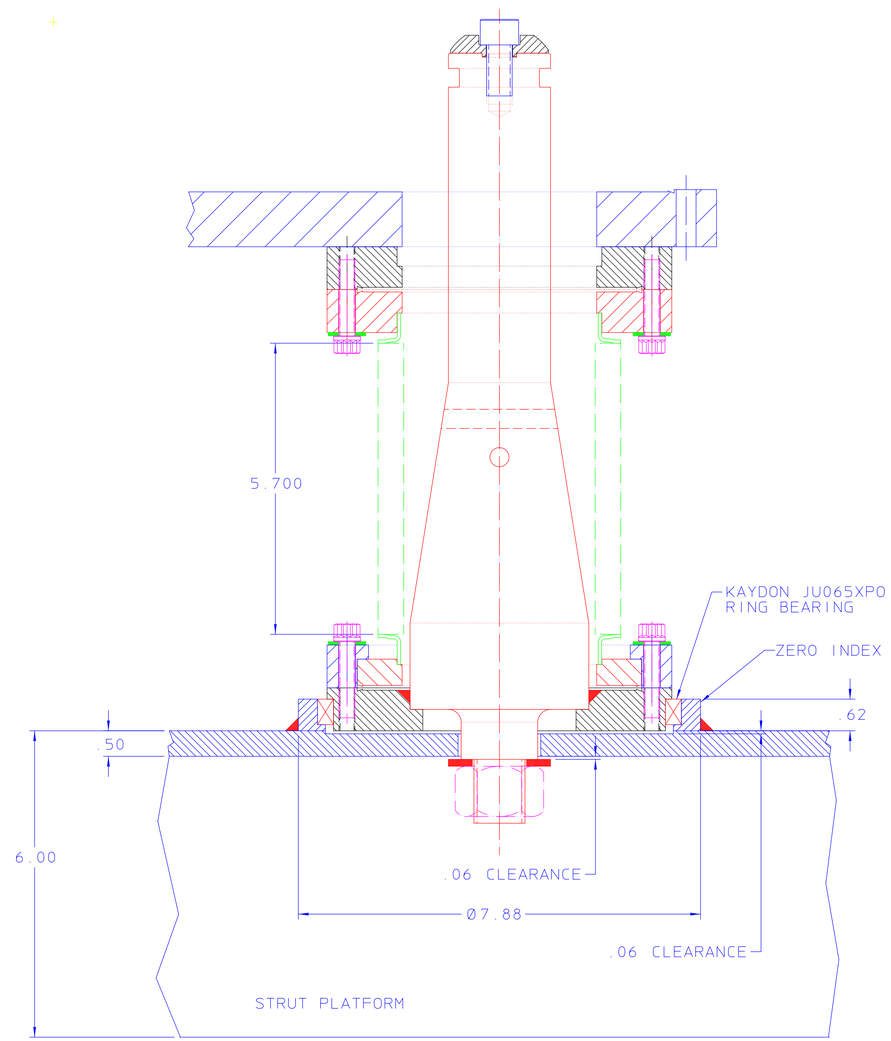
5.700
KAYDON JU065XPO
RING BEARING
ZERO INDEX
.62
.50
6.00
.06 CLEARANCE
Ø7.88
.06 CLEARANCE
STRUT PLATFORM

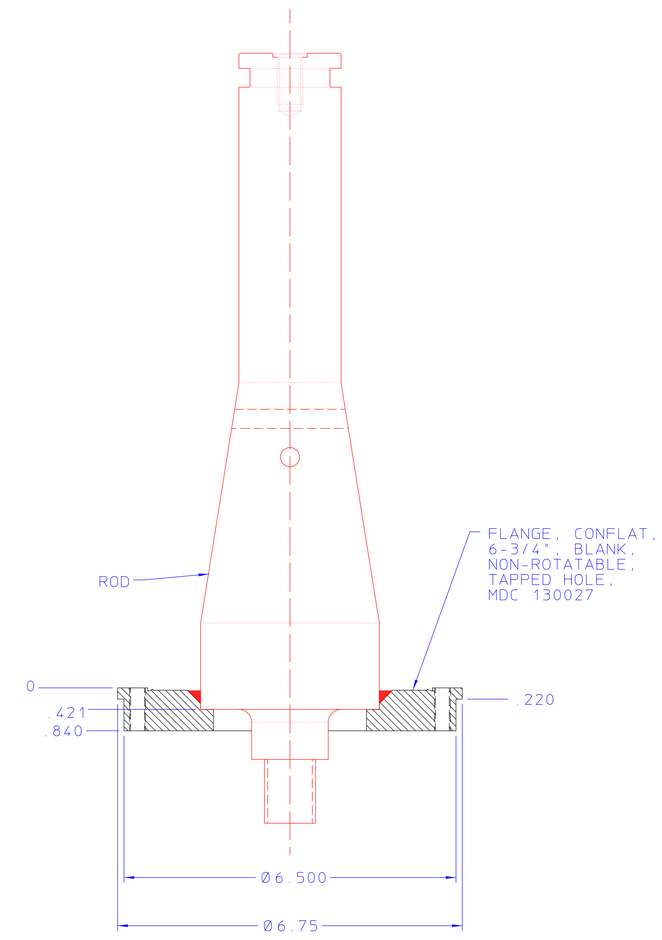
ROD
FLANGE, CONFLAT,
6-3/4", BLANK,
NON-ROTATABLE,
TAPPED HOLE,
MDC 130027
0
.421
.840
.220
Ø6.500
Ø6.75