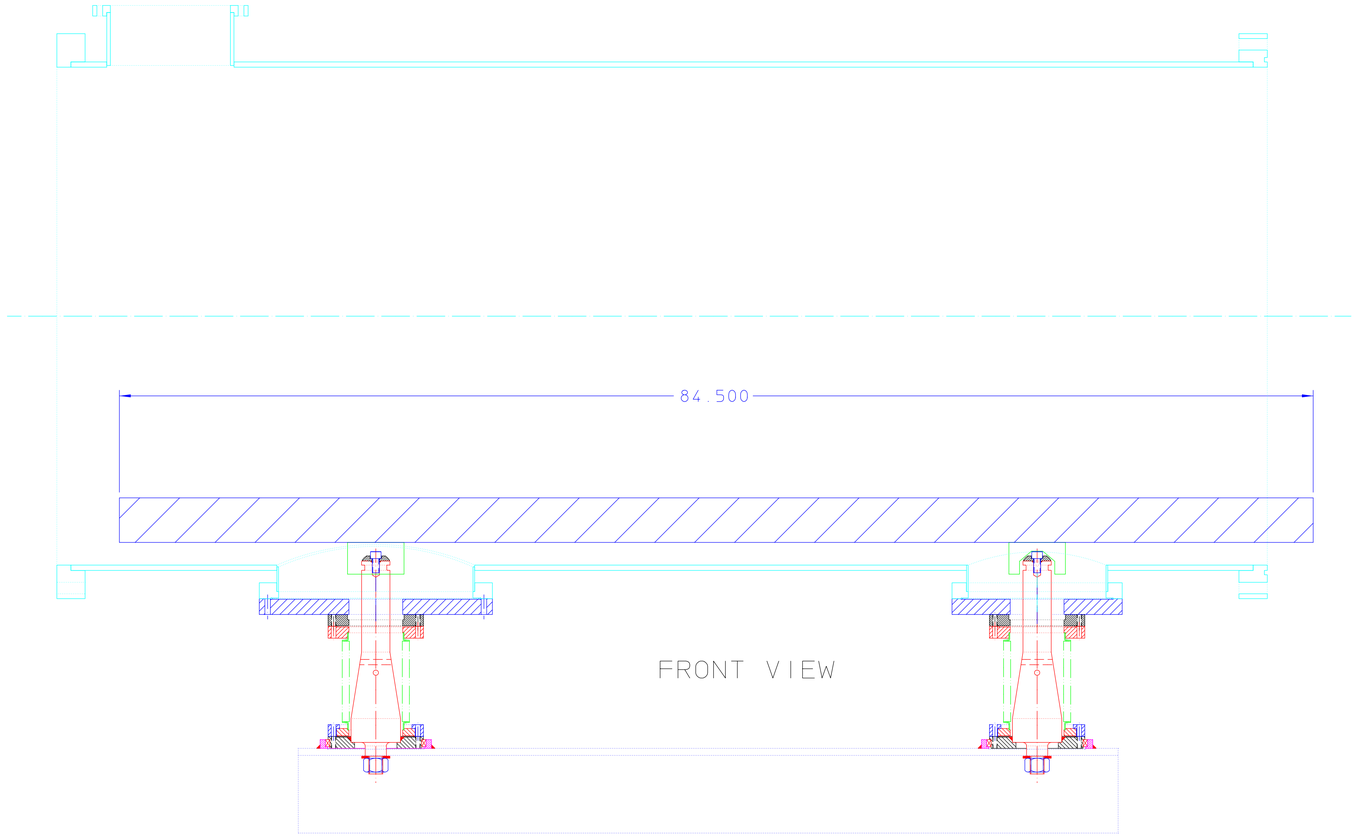

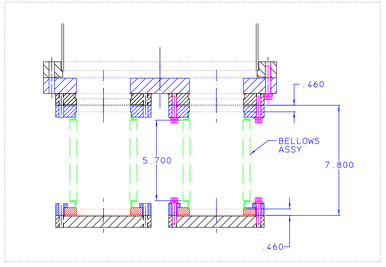

LEFT

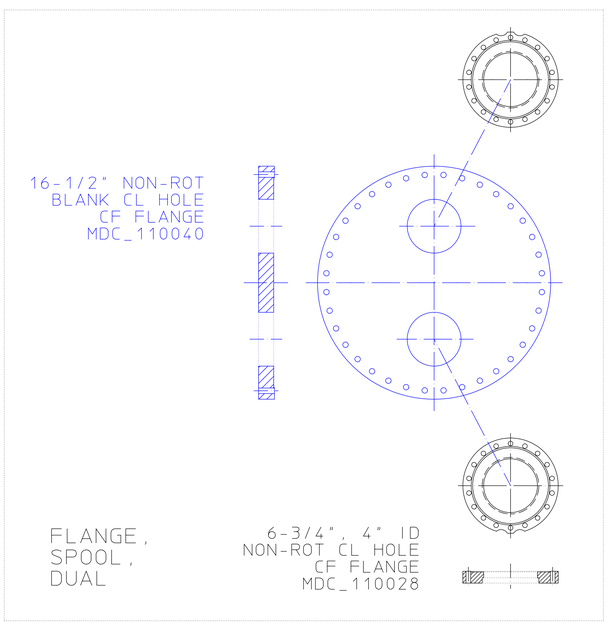

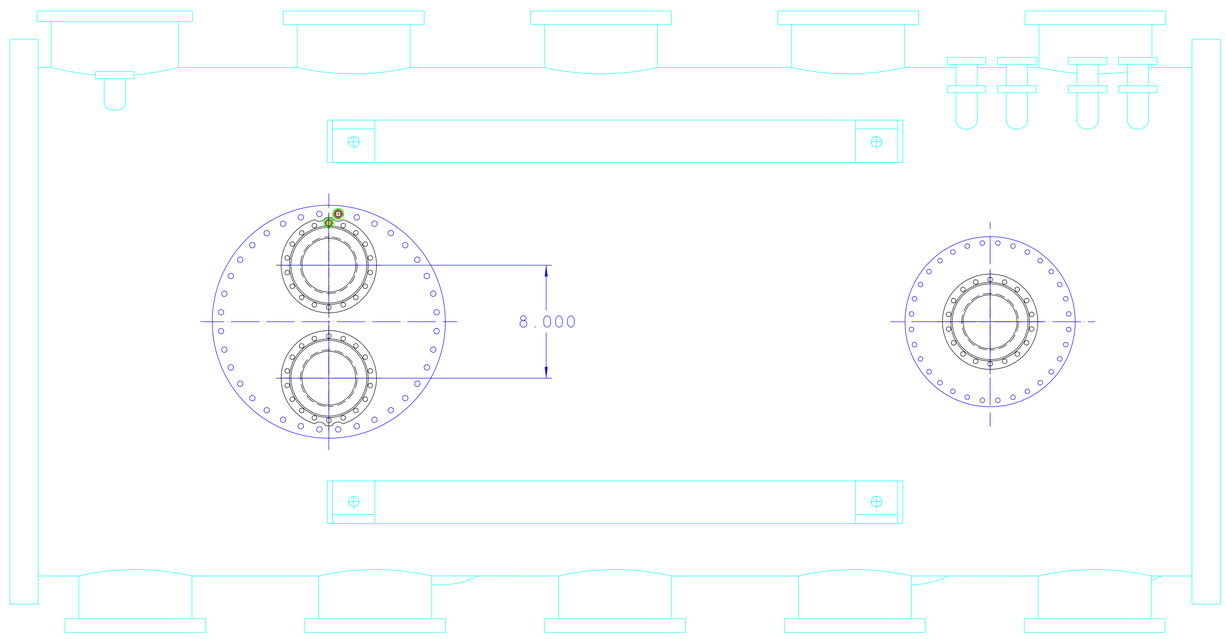
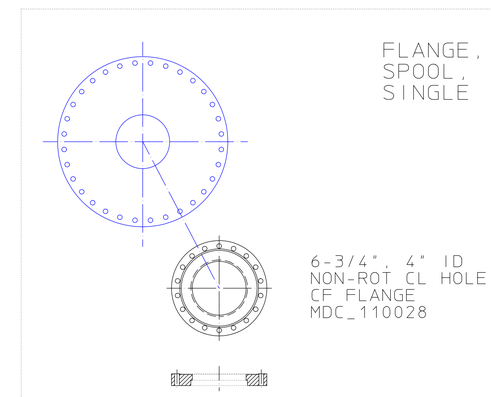
BOTTOM VIEW