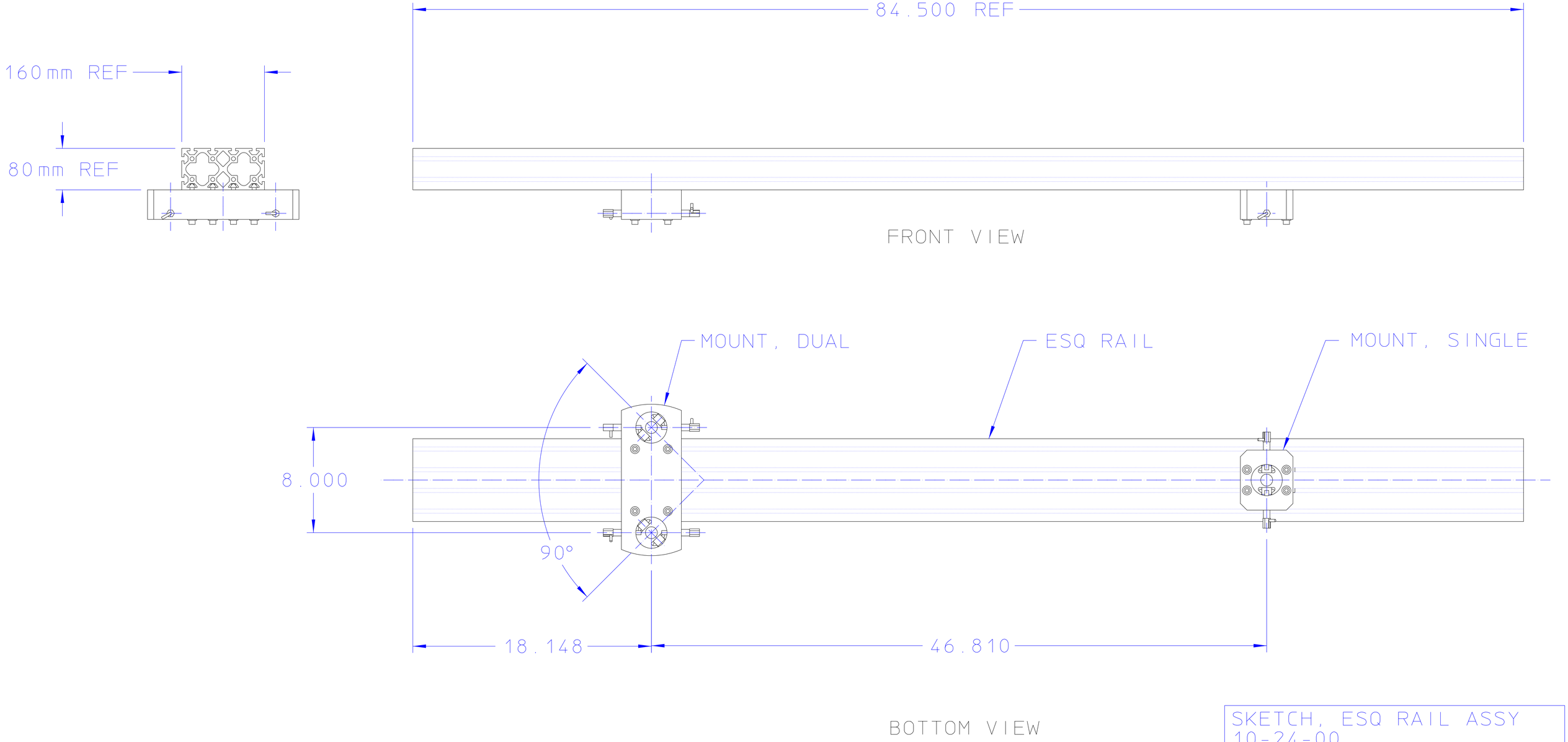

SKETCH, ESQ RAIL ASSY
10-24-00

1) VEE-AXIS COMPLIANCE = ± .12 INCH, 3 PLACES