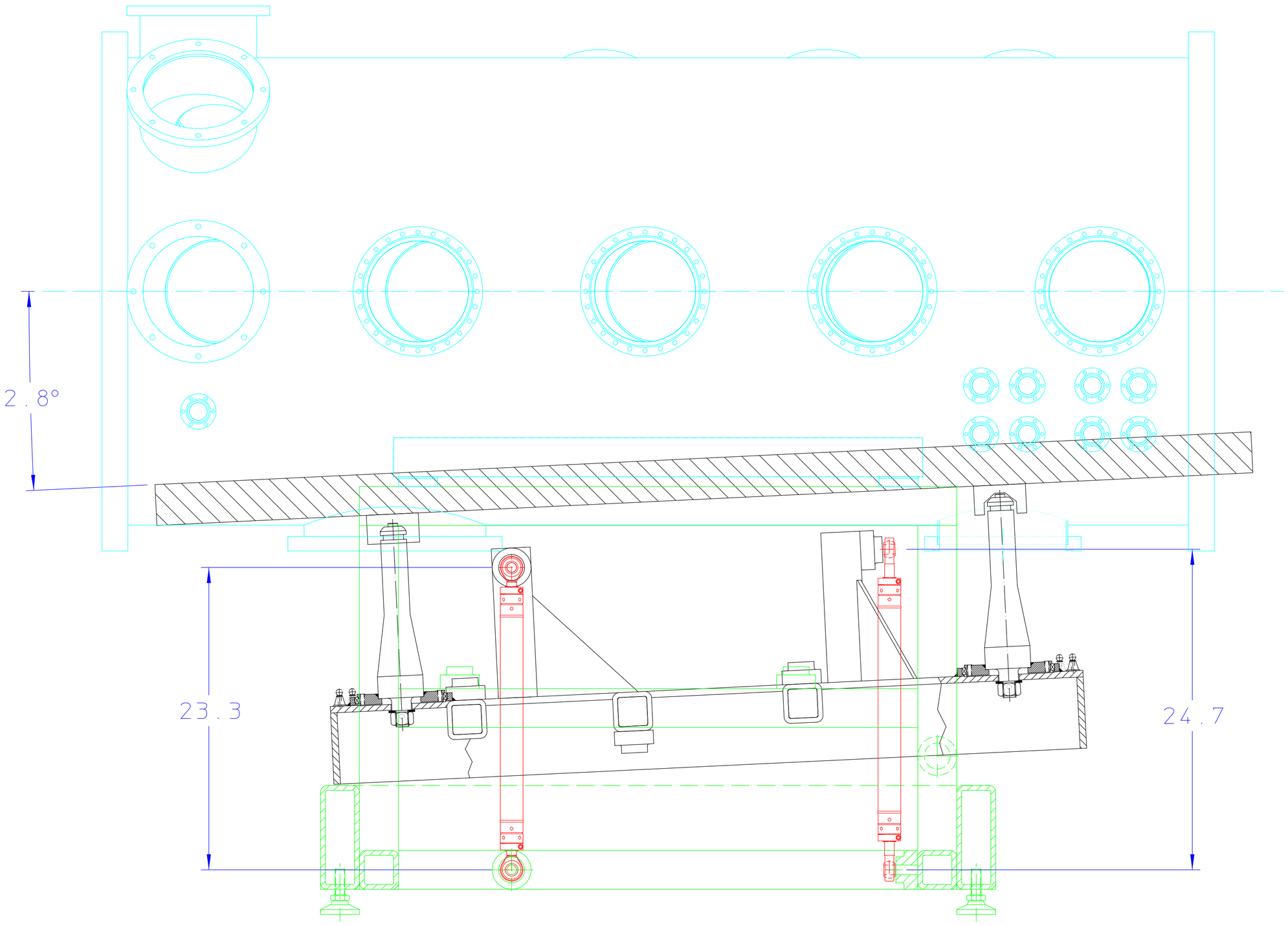

PITCH RANGE

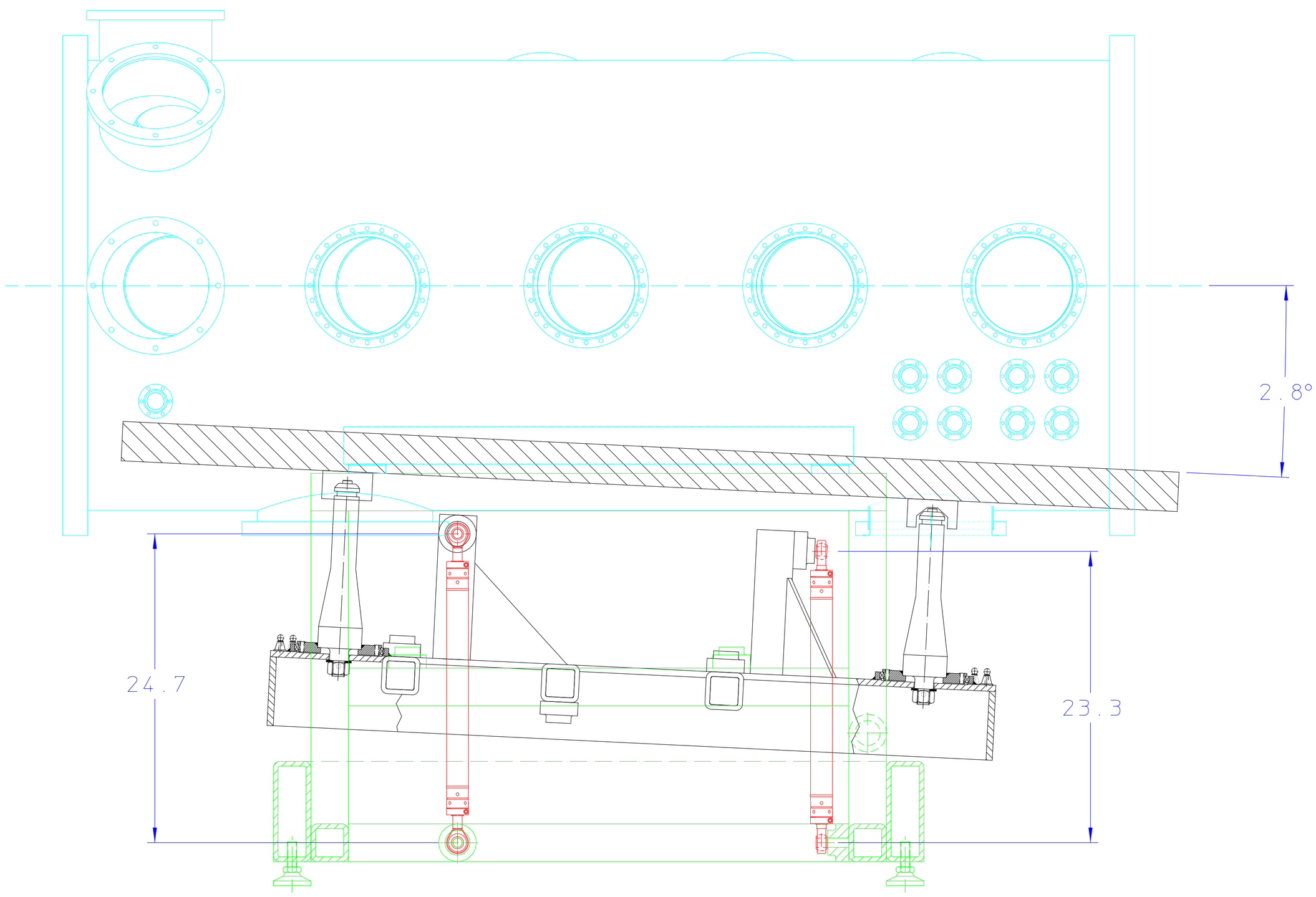

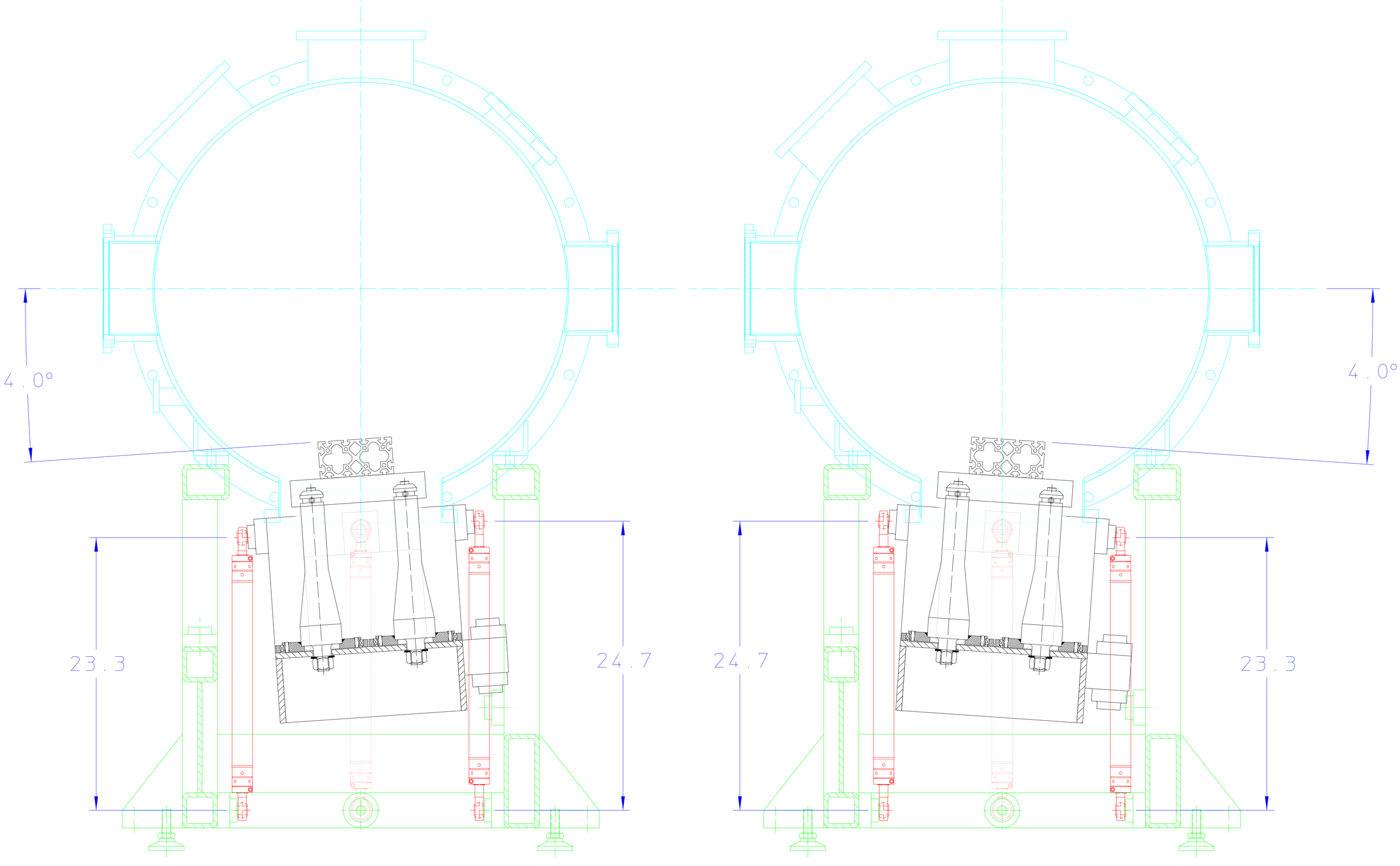

ROLL RANGE

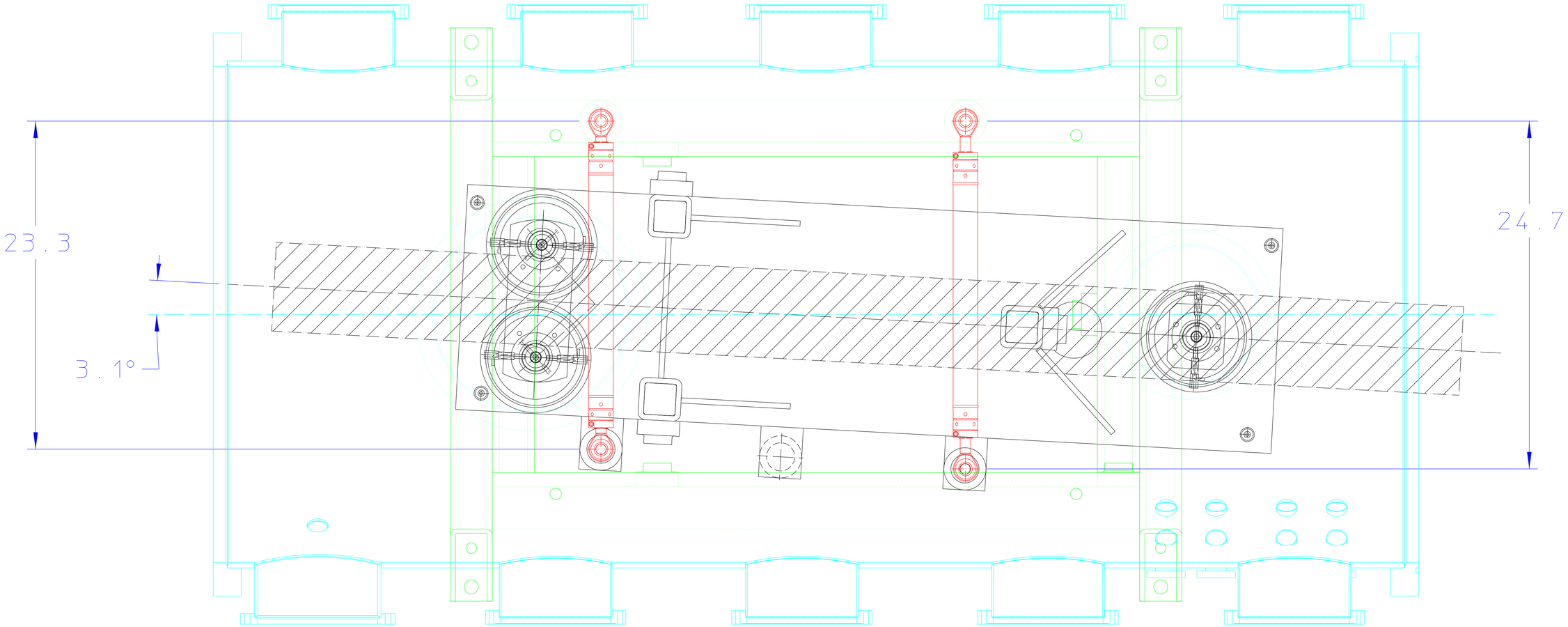

YAW RANGE

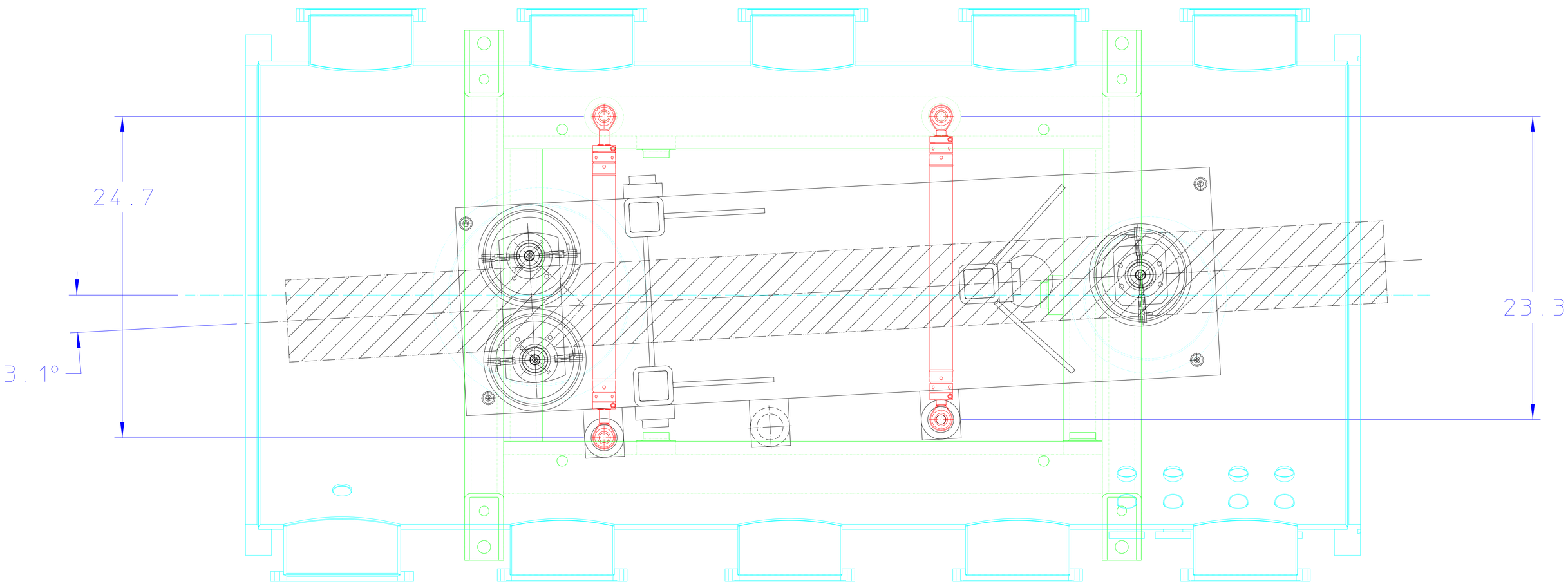

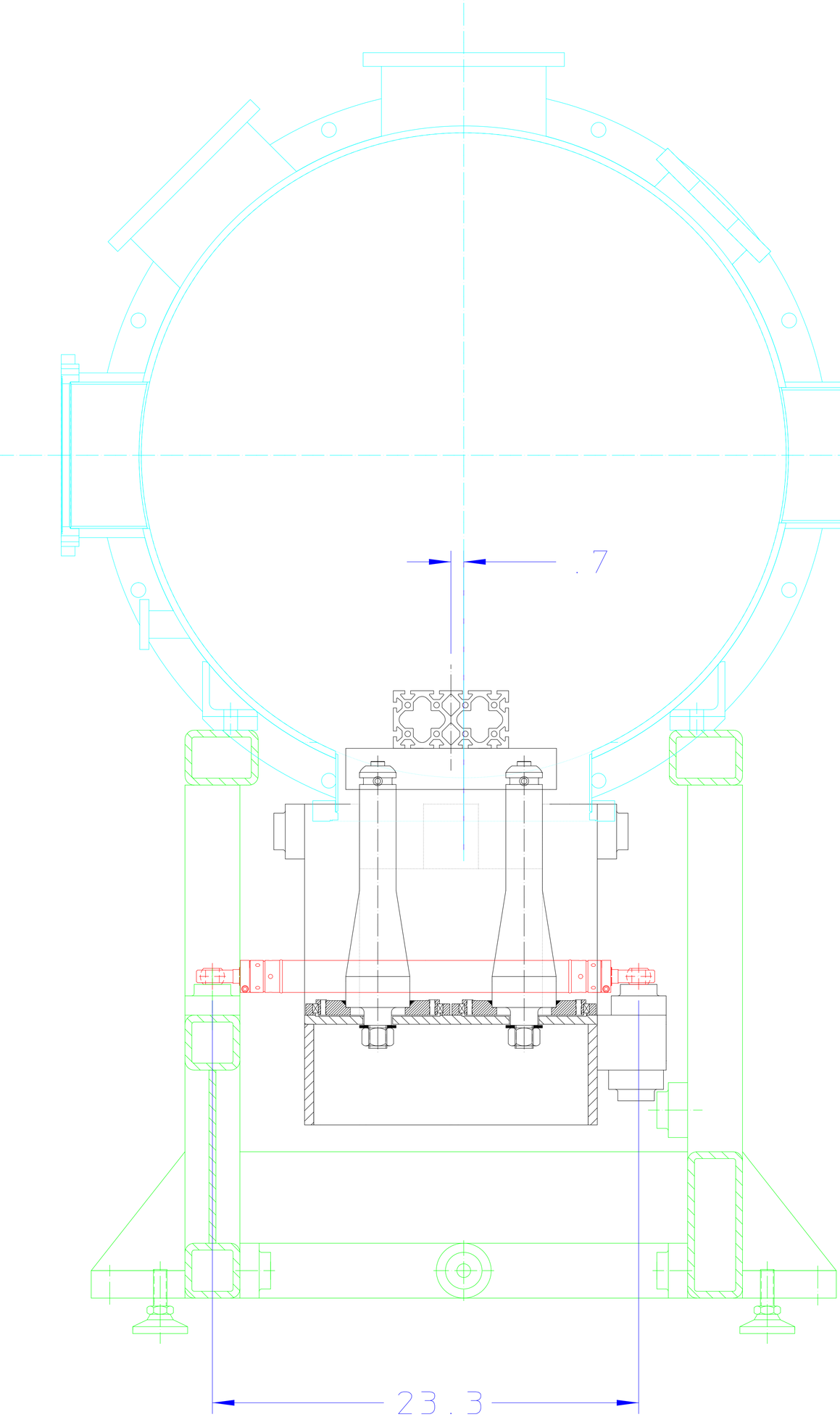

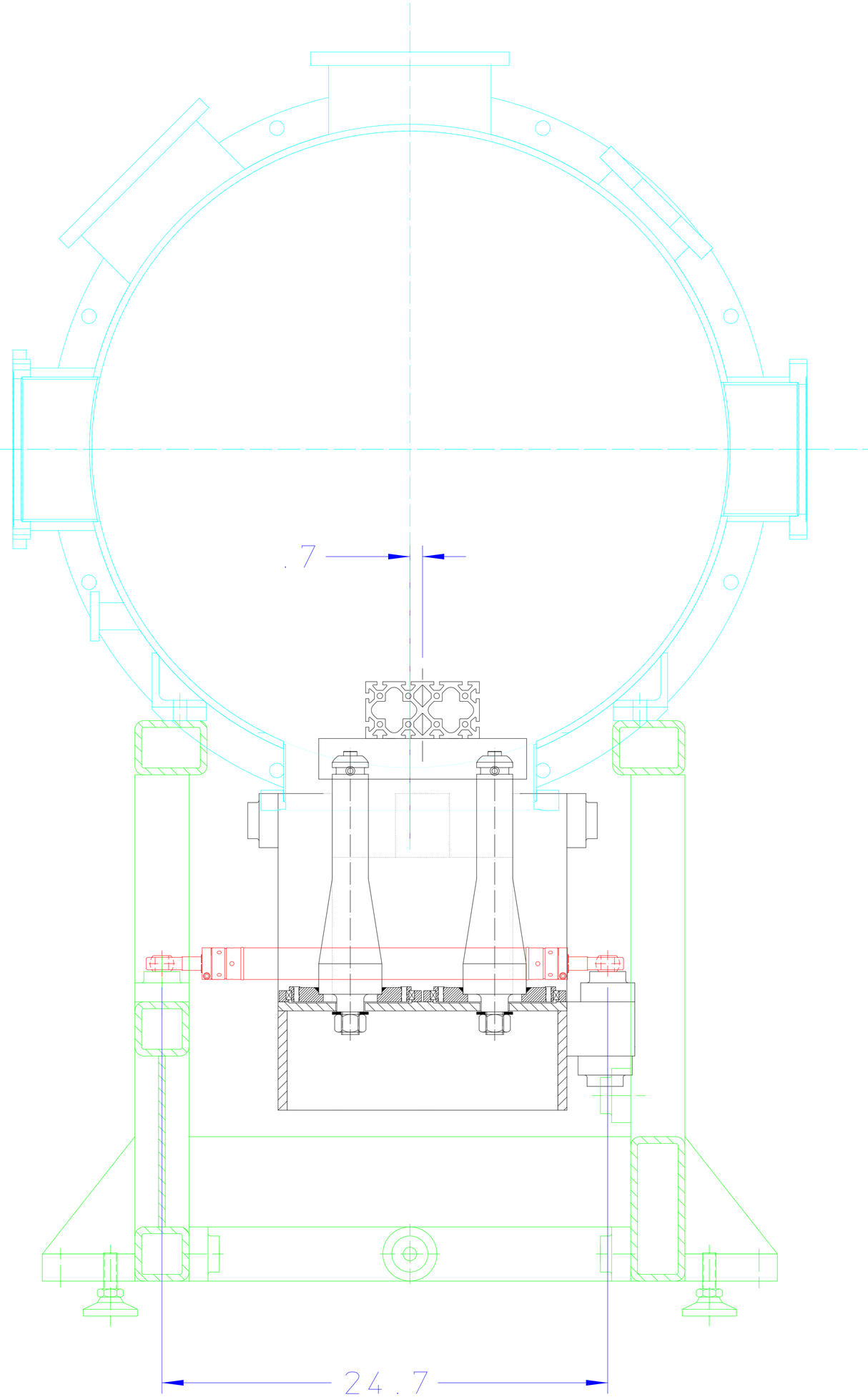

X RANGE

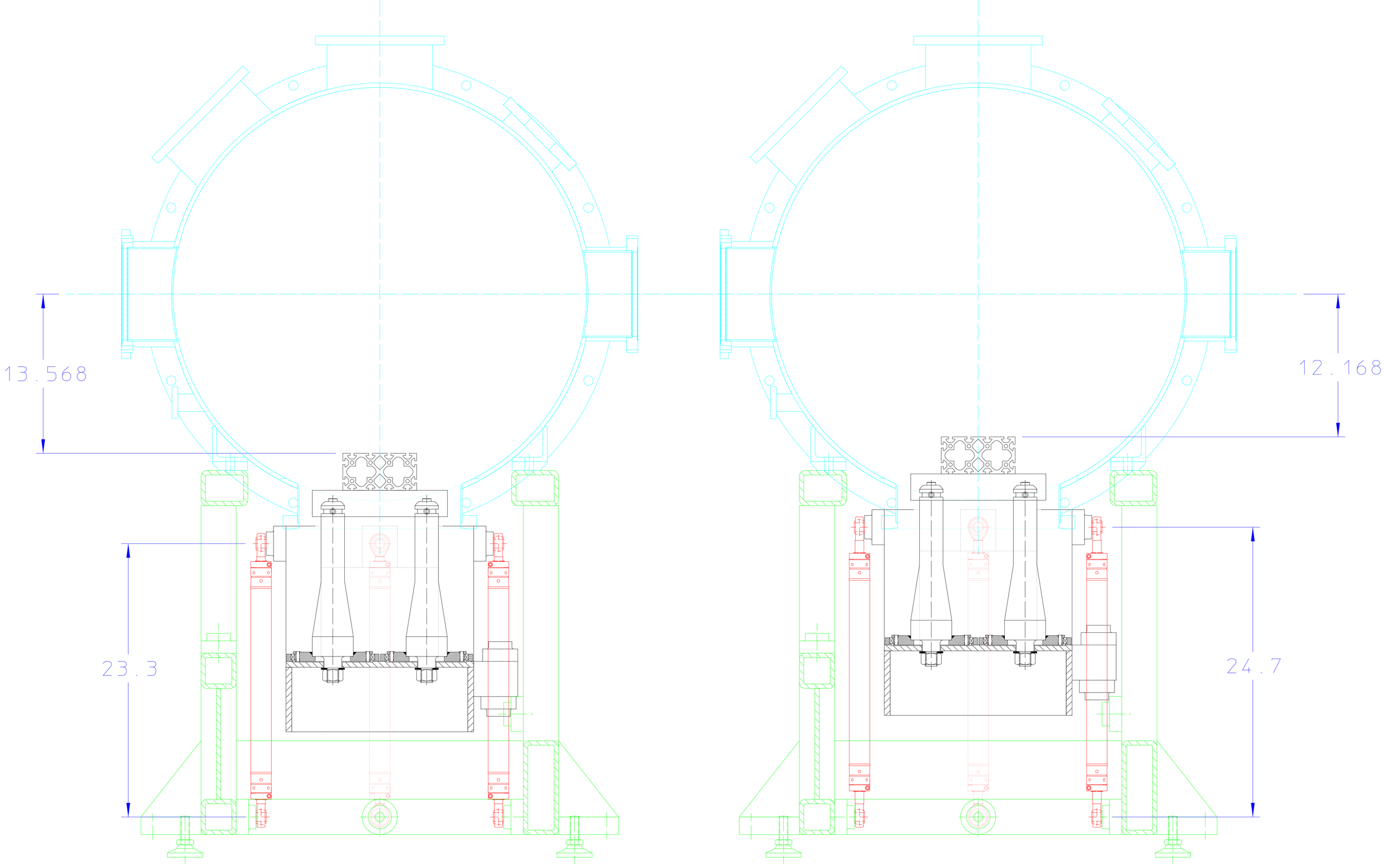

Y RANGE