Typical High Vopltage Grid frame.
The open area is the active grid surface

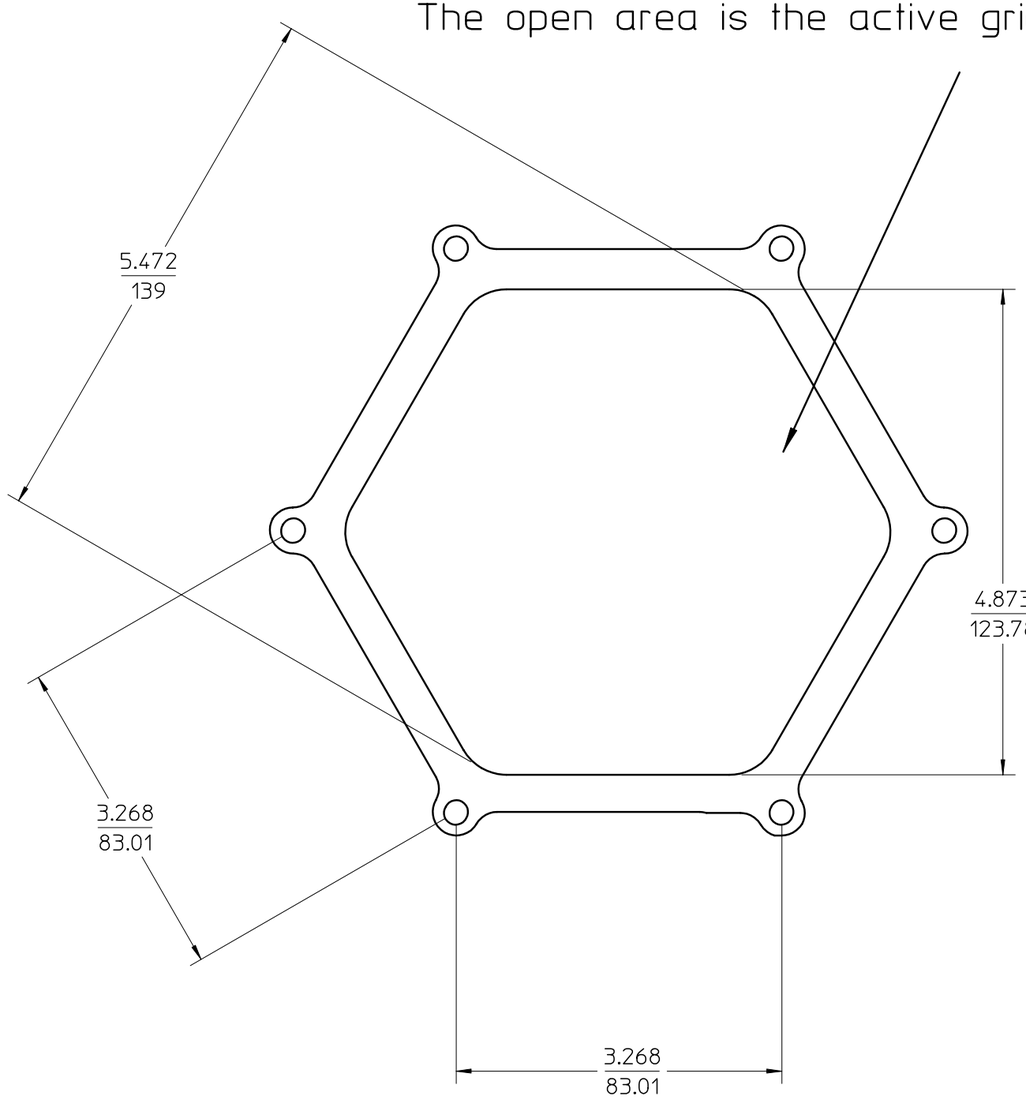

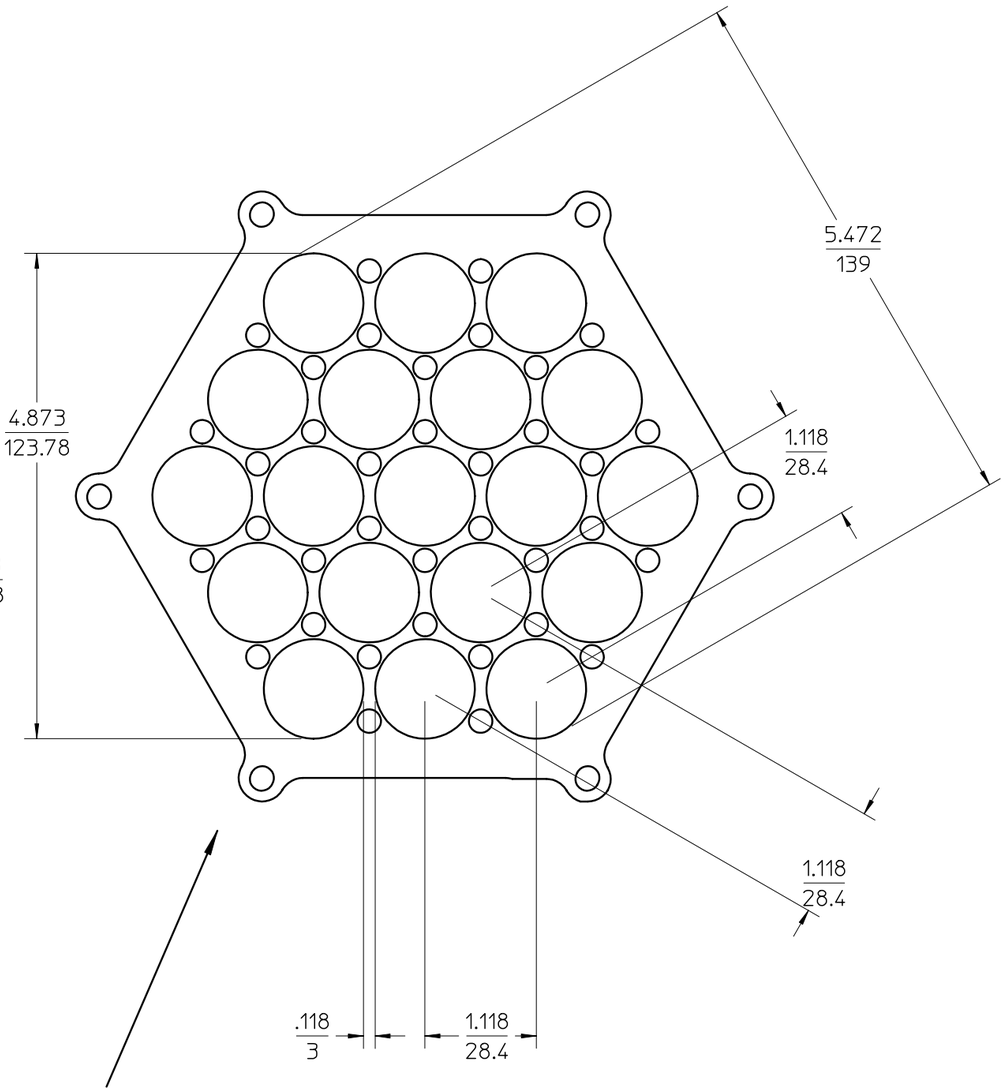

Typical PMT support frame.

Dimensions are inches/mm