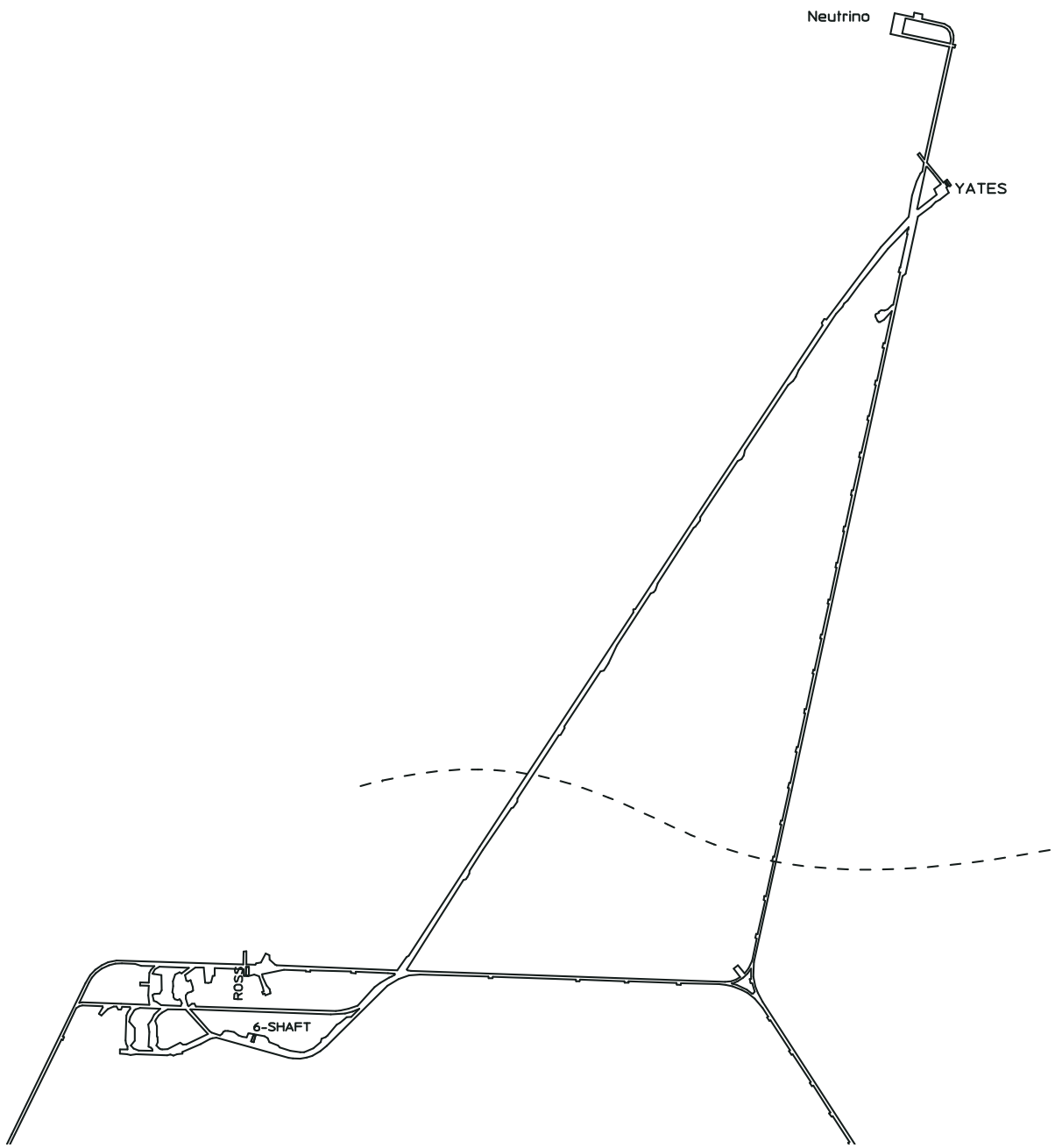
Neutrino
YATES
ROSS
6-SHAFT